4MP WDR Dual-light VF Bullet NetWork Camera

IPC2324LE-ADZK-DL2

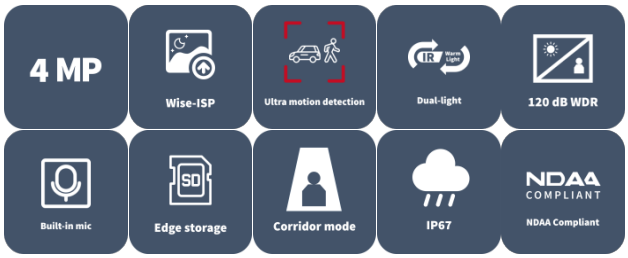

Features

- High quality image with 4 MP, 1/3.0" CMOS sensor
- 4 MP (2688 × 1520)@25/20 fps; 4 MP (2560 × 1440)@25/20 fps; 3 MP (2304 × 1296)@30/25 fps; 1080P (1920 × 1080)@30/25 fps
- Ultra 265, H.265, H.264, MJPEG (Sub Stream Only)
- Smart intrusion prevention, including cross line, intrusion detection (based on human body detection)
- Support ultra motion detection (human/ vehicle detection)
- 120 dB true WDR technology enables clear image in strong light scene
- Built in mic
- Supports 9:16 corridor mode
- Smart IR, up to 50 m (164.0 ft.) IR distance
- Warm light, up to 50 m (164.0 ft.) warm light distance
- MicroSD, up to 512 GB

Specifications

Model	IPC2324LE-ADZK-DL2
Camera	
Max Resolution	4 MP
Sensor	1/3.0" CMOS
Min. Illumination	Color: 0.002 Lux (F1.6, AGC ON), 0 Lux with IR on
Day/Night	IR-cut filter with auto switch (ICR)
Shutter	Auto/Manual, 1 to 1/100000 s
Adjustment Angle	Pan: 0° to 360°, Tilt: 0° to 90°, Rotate: 0° to 360°
S/N	> 52 dB
WDR	120 dB
Lens	
Focal Length	2.8 to 12 mm
Iris	F1.6
Field of View (H)	95.6° to 30.9°
Field of View (V)	52.0° to 17.6°
Field of View (D)	112.2° to 33.7°
Lens Type	Motorized
Iris Type	Fixed
DORI	
DORI Distance (Lens)	2.8 to 12 mm
DORI Distance (Detect)	42.0 m to 180.0 m (137.8 ft. to 590.6 ft.)
DORI Distance (Observe)	21.0 m to 90.0 m (68.9 ft. to 295.3 ft.)
DORI Distance (Recognize)	10.1 m to 43.2 m (33.1 ft. to 141.7 ft.)
DORI Distance (Identify)	6.3 m to 27.0 m (20.7 ft. to 88.6 ft.
Illuminator	
Illumination Distance (Warm Light)	50 m (164.0 ft.)
Illumination Distance (IR)	50 m (164.0 ft.)
Light On/Off Control	Auto/Manual
Wavelength	850 nm
Supplemental Light	Dual light
Video	
Video Compression	Ultra 265, H.265, H.264, MJPEG (Sub Stream Only)
H.264 Code Profile	Baseline profile, Main profile, High profile
Frame Rate	Main Stream: 4 MP (2688 × 1520), max. 25 fps; 4 MP (2560 × 1440), max. 25 fps; 3 MP (2304 × 1296), max. 30 fps; 1080P (1920 × 1080), max. 30 fps; 720P (1280 × 720), max. 30 fps; Sub Stream: 720P (1280 × 720), max. 30 fps; D1 (720 × 576), max. 30 fps; 640 × 360, max. 30 fps; 2CIF (704 × 288), max. 30 fps; CIF (352 × 288), max. 30 fps;
Video Bit Rate	128 Kbps to 6144 Kbps
U-code	Support
OSD	Up to 4 OSDs

Privacy Mask	Up to 4 areas
ROI	Support
Video Stream	Dual streams
Image	
White Balance	Auto, Outdoor, Fine tune, Sodium lamp, Locked, Auto2, Area white balance
Digital Noise Reduction	2D/3D DNR
Smart IR	Support
Flip	Normal, Flip vertical, Flip horizontal, 180°, 90° Clockwise, 90° Anti-clockwise
Dewarping	N/A
HLC	Support
BLC	Support
Defog	Digital defog
Events	
Basic Detection	Motion detection, Ultra motion detection (human/ vehicle detection) , Tampering alarm, Audio detection, Cross line (based on human body detection), Intrusion (based on human body detection)
General Function	Watermark, IP address filtering, Access policy, ARP protection, RTSP authentication, User authentication, HTTP authentication
UMD (Ultra Motion Detection)	Support
Audio	
Audio Compression	G.711U, G.711A, AAC-LC
Audio Bitrate	G.711U/G.711A: 64 kbps, AAC-LC: 128 kbps
Two-way Audio	N/A
Suppression	Support
Sampling Rate	G.711U/G.711A: 8 kHz, AAC-LC: 8 kHz, 16 kHz, 48 kHz
Storage	
Edge Storage	MicroSD, up to 512 GB
Network Storage	ANR, NAS (NFS)
Network	
Protocols	IPv4, IPv6, IGMP, ICMP, ARP, TCP, UDP, DHCP, RTP, RTSP, RTCP, RTMP, DNS, DDNS, NTP, FTP, UPnP, HTTP, HTTPS, SMTP, SSL/TLS, QoS, SNMP, PPPoE, 802.1x
Compatible Integration	ONVIF (Profile S, Profile G, Profile T), API, SDK
User/Host	Up to 32 users. 3 user levels: administrator, common user and operator
Security	Password protection, Strong Password, HTTPS encryption, Export operation logs, Basic and Digest Authentication for RTSP, Digest Authentication for HTTP, TLS 1.2, WSSE and Digest Authentication for ONVIF
Client	EZStation, APP
Web Browser	Plug-in required live view: IE 10+, Chrome 45+, Firefox 52+, Edge 79+, Plug-in free live view: Chrome 57+, Firefox 58+, Edge 16+
Interface	
Audio I/O	N/A
Alarm I/O	N/A
Serial Port	N/A

Built-in Mic	Support
Built-in Speaker	N/A
WIFI	N/A
Network	1 × RJ45 10 M/100 M Base-TX Ethernet
Video Output	N/A
Certification	
EMC	CE-EMC (EN 55032, EN 61000-3-3, EN IEC 61000-3-2, EN 50130-4) FCC (FCC 47 CFR part15 B)
Safety	CE-LVD (EN 62368-1) UL/CUL (UL 62368-1, CAN/CSA C22.2 No. 62368-1)
Environment	CE-RoHS (2011/65/EU ; (EU) 2015/863) ; WEEE (2012/19/EU)
Protection	IP67 (IEC 60529)
General	
Power	DC 12 V±25%, PoE (IEEE 802.3af)
Power Consumption	Max. 7.7 W
Power Interface	Ø5.5 mm coaxial power plug
Dimensions	0.52 kg (1.15 lb.)
Weight	206.0 mm × 73.0 mm × 73.0 mm (8.1" × 2.9" × 2.9") (L × W × H)
Working Environment	-30 ℃ to 60 ℃ (-22 ℉ to 140 ℉), Humidity: ≤ 95% RH (non-condensing)
Material	Graphene + Metal
Storage Environment	-30 ℃ to 60 ℃ (-22 ℉ to 140 ℉), Humidity: ≤ 95% RH (non-condensing)
Surge Protection	4 KV
Reset Button	Support
Web Client Language	14 Languages: English, Simplified Chinese, Polish, German, Russian, French, Korean, Dutch, Czech, Portuguese, Spanish, Spanish (Europe), Italian, Turkish
Configurable	
P/N	Support

Dimensions

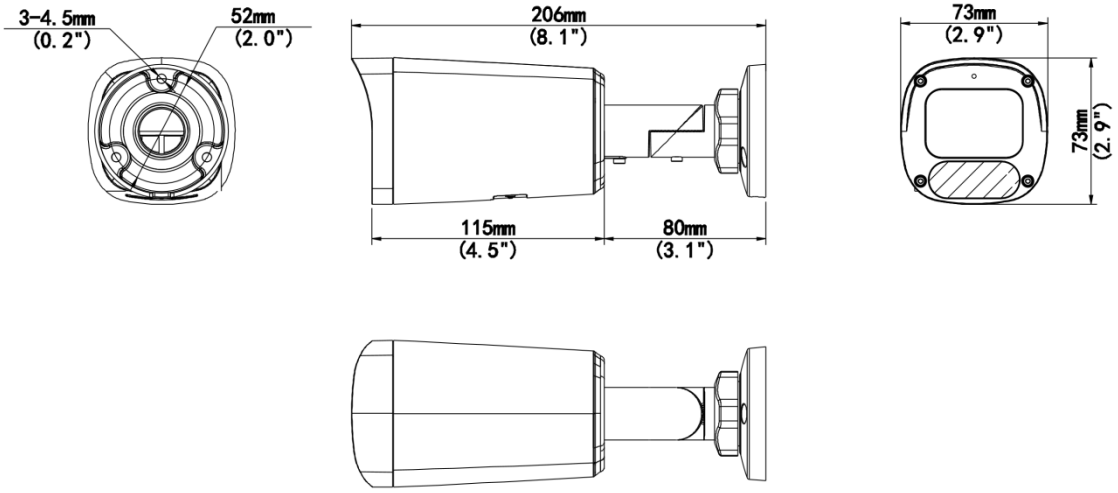

Accessories

TR-A01-IN

NPT 3/4'' Waterproof Cable Gland

TR-JB05-B-IN

Small Bullet Junction Box(Elegant White)

TR-UP06-C-IN-V2

Pole Mounting Bracket for Bullet Junction Box Only

TR-UC08-C-V2

Bullet&Dome Corner Mounting Bracket

Unlimited New View

浙江宇视科技有限公司

http://www.uniview.com

overseasbusiness@uniview.com; globalsupport@uniview.com

South Tower, Building 10, Wanlun Science Park, 88 Jiangling Road, Hangzhou, P.R.China

©2023-2025 Zhejiang Uniview Technologies Co., Ltd. All rights reserved.

*Product specifications and availability are subject to change without notice.

虽然我司试图在本资料中提供准确的信息，但不保证资料的内容不含有技术性误差或印刷性错误，为此我司对本资料中的不准确不承担任何责任。我司保留在没有通知或提示的情况下对本资料的内容进行修改的权利。