Wireless Bridge

Device Information

Contents

Chapter 1 About This Manual 1

Chapter 2 Elevator Series 3

2.1 2.4 GHz 200m 4

2.1.1 DS-3WF0BC-2NT 4

2.1.2 DS-3WF0BC-2NT(B) 11

2.2 2.4GHz 500m 18

2.2.1 DS-3WF0EC-2NT 18

2.3 5GHz 500m 25

2.3.1 DS-3WF0EC-5ACT 25

2.3.2 DS-3WF0EC-5ACT(B) 33

Chapter 3 Outdoor Series 43

3.1 2.4GHz 500m 43

3.1.1 DS-3WF500-EI-2N 43

3.1.2 DS-3WF500S-EI-2N 50

3.2 2.4GHz 1km 57

3.2.1 DS-3WF0FA-2N/O 57

3.2.2 DS-3WF0FC-2N/O 64

3.2.3 DS-3WF1000-EI-2N 71

3.2.4 DS-3WF1000S-EI-2N 78

3.3 5GHz 1km 85

3.3.1 DS-3WF0FA-5AC/O 85

3.4 5GHz 3km 97

3.4.1 DS-3WF3000-EI-5AC/P 97

3.4.2 DS-3WF3000S-EI-5AC/P 105

3.5 5GHz 5km 112

3.5.1 DS-3WF02-5AC/D 112

3.5.2 DS-3WF02C-5AC/O 121
3.5.3 DS-3WF02C-5AC/O V2 129
3.5.4 DS-3WF02C-5AC/O V3 137
3.6 5GHz 15 km 145
3.6.1 DS-3WF03C-5AC/O 145
3.6.2 DS-3WF03C-5AC/O V2 153
3.6.3 DS-3WF03C-5AC/O V3 161
Chapter 4 First-Time Use 170
4.1 Activation 170
4.2 Login 172
4.3 Device Pairing 173
Chapter 5 Remote Management 174
Chapter 6 FAQ 175
6.1 Why Devices Pairing Failed? 175
6.2 Why the Device Cannot Start Up? 175
6.3 Why the Signal Intensity Is Too Low? 175
6.4 Why the Throughput Is Inadequate Even with High Signal Quality? 176
6.5 Why the Wireless Connection Rate Is Relatively Low? 176
6.6 Why There Are Excessive Packet Loss and Time Delay when PC Pings the Device IP Address? 176

Chapter 1 About This Manual

This manual collects device information for all models of Hikvision wireless bridges, including packing list, device appearance, device installation, device connection, activation, paring and remote management.

Install Devices

Get the detailed installation guide of the device model.

- Method 1: Click ☰ to go to ***the directory*** and search for the device model in Search by Title .
- Method 2: Find the device model in the following table.

Table 1-1 Device Model

Frequency	Distance	Elevator Series	Outdoor Series
2.4GHz	200m	◦ ***DS-3WF0BC-2NT*** ◦ ***DS-3WF0BC-2NT(B)***	--
	500m	◦ ***DS-3WF0EC-2NT***	◦ ***DS-3WF500-EI-2N*** ◦ ***DS-3WF500S-EI-2N***
	1km	--	◦ ***DS-3WF0FA-2N/O*** ◦ ***DS-3WF0FC-2N/O*** ◦ ***DS-3WF1000-EI-2N*** ◦ ***DS-3WF1000S-EI-2N***
5GHz	500m	◦ ***DS-3WF0EC-5ACT*** ◦ ***DS-3WF0EC-5ACT(B)***	--
	1km	--	◦ ***DS-3WF0FA-5AC/O***
	3km	--	◦ ***DS-3WF3000-EI-5AC/P*** ◦ ***DS-3WF3000S-EI-5AC/P***
	5km	--	◦ ***DS-3WF02-5AC/D*** ◦ ***DS-3WF02C-5AC/O*** ◦ ***DS-3WF02C-5AC/O V2*** ◦ ***DS-3WF02C-5AC/O V3***
	15km	--	◦ ***DS-3WF03C-5AC/O*** ◦ ***DS-3WF03C-5AC/O V2*** ◦ ***DS-3WF03C-5AC/O V3***

Note

The device information varies with different models. The Quick Start Guide in the packaging is for reference only.

First-Time Use

For the first-time using, please complete the following steps:

1. ***Activation***
2. ***Login***
3. ***Device Pairing***

Manage Devices

After the device is activated and paired, you can manage the device remotely.

- Click ***User Manual (Web)*** to check management information on web.
- Click ***Remote Management*** to find more management information on iVMS-4200 client, SADP software, and HikCentral Professional clients.

FAQ

- ***Why Devices Pairing Failed?***
- ***Why the Device Cannot Start Up?***
- ***Why the Signal Intensity Is Too Low?***
- ***Why the Throughput Is Inadequate Even with High Signal Quality?***
- ***Why the Wireless Connection Rate Is Relatively Low?***
- ***Why There Are Excessive Packet Loss and Time Delay when PC Pings the Device IP Address?***

Chapter 2 Elevator Series

This series of devices are suitable for wireless video transmission in elevators.

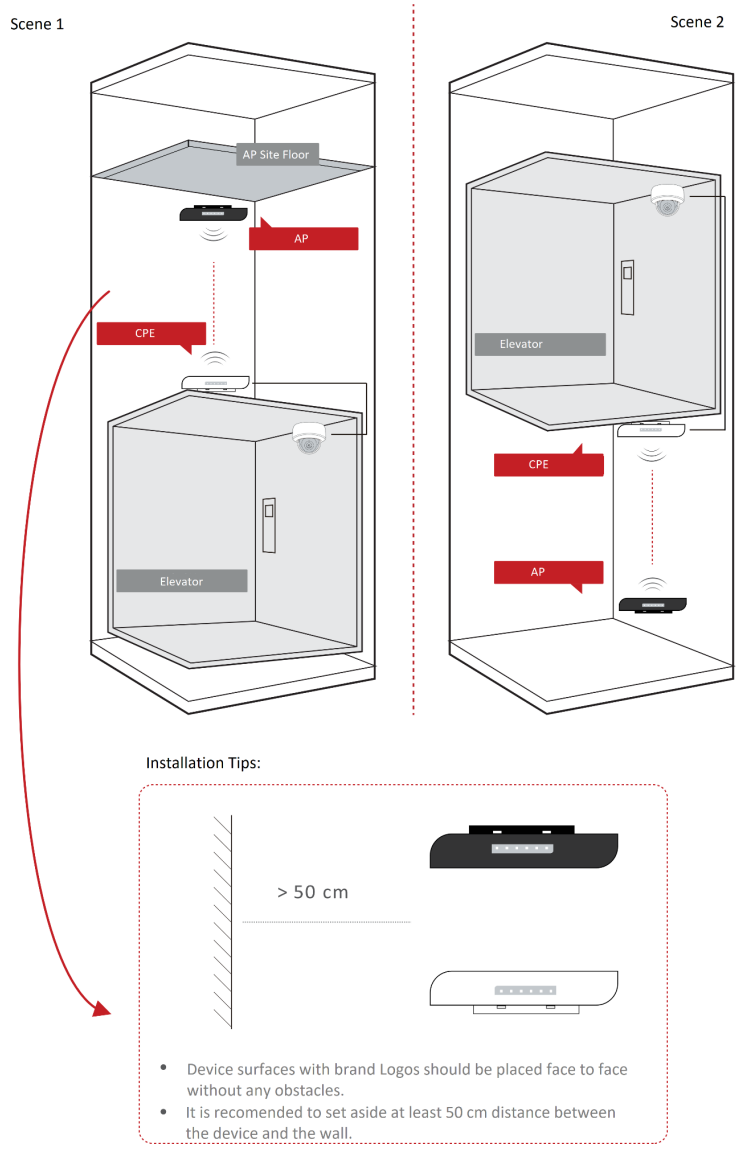

Figure 2-1 Application Scene

2.1 2.4 GHz 200m

2.1.1 DS-3WF0BC-2NT

The 2.4 GHz wireless bridge (hereinafter referred to as *the device*) is used for wireless transmission within 200 m and is suitable for wireless video transmission in elevators .

Packing List

Please check if there is any damage of the package first. According to the packing list, make sure no item is lost. After checking all the items included, you can continue to install the device.

Table 2-1 Packing List

Item	Appearance	Quantity
Wireless Bridge	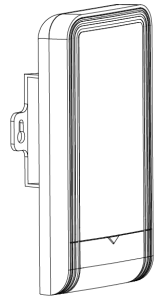	× 2
PoE Injector	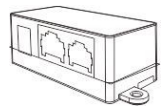	× 2
Power Adapter	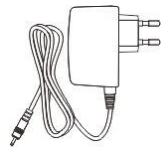	× 2
Cable Tie		× 4

Item	Appearance	Quantity
Quick Start Guide	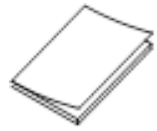	× 1
Regulatory Compliance and Safety Information	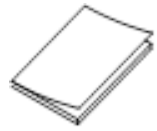	× 1

Note

The device image used here is only for example purpose. The actual device may vary with models.

Interface/Button

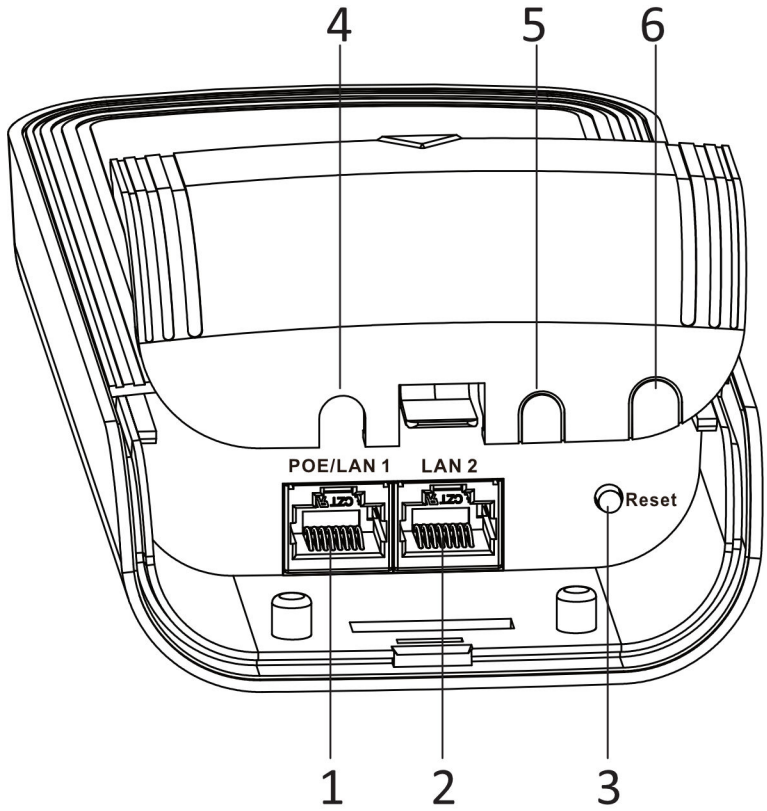

Figure 2-2 Device Interface/Button

Table 2-2 Device Interface/Button Description

No.	Interface/Button	Description
1	PoE/LAN 1	The 10/100 Mbps adaptive RJ45 port, also can be used as a PoE port.
2	LAN 2	The 10/100 Mbps adaptive RJ45 port.
3	Reset	Long press for 4 seconds to restore to factory settings.
4/5/6	Network Cable Slot	Reserved for easy placement of the network cables.

Indicator

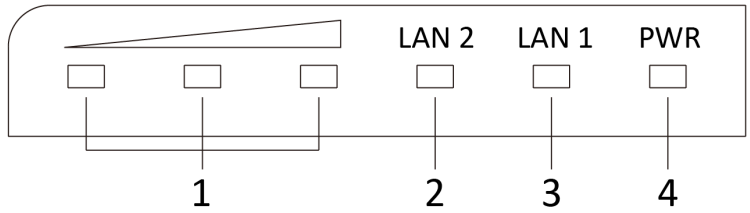

Figure 2-3 Device Indicator

Table 2-3 Device Indicator Description

No.	Indicator	Description	
1	Signal Strength Indicator	Solid on	The devices are matched. • Solid red, yellow, and green: The wireless signal is strong. • Solid red and yellow, unlit green: The wireless signal is normal. • Solid red, unlit yellow and green: The wireless signal is weak. Please adjust the position and direction of the device.
		Unlit	The devices are not matched.
2/3	LAN 2/LAN Indicator	Solid Green	The port is connected.
		Flashing Green	The port is transmitting data. The faster the indicator flashes, the greater the transmission rate is.
		Unlit	The port is disconnected or connection is abnormal.

No.	Indicator	Description	
4	Power Indicator	Solid Green	The device is powered on normally
		Unlit	No power supply connected or power supply is abnormal.

Application Scene

Note

- The following application scenes are for your reference only. The actual scene prevails.
- The device image used here is only for example purpose. The actual device may vary with models.

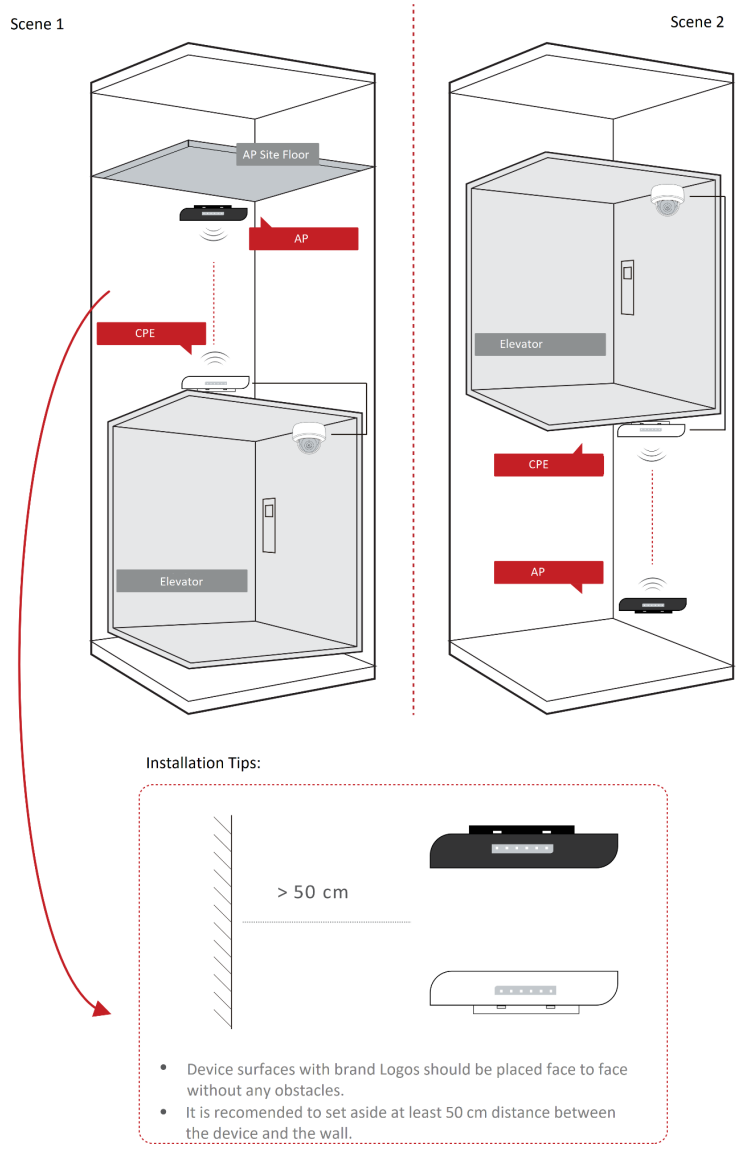

Figure 2-4 Application Scene

Preparation for Installation

To avoid device damage or personal injury caused by improper usage of the device, please follow the preparations below.

- Use the attached power adapter and PoE injector to power the device.
- The distance between AP and CPE should be less than 200 m to secure transmission rate.
- Set aside at least 50 cm distance between the device and the wall.
- At least 2 m distance should be kept between two adjacent devices.
- The devices should be installed face to face and the max. angle of deviation is 30°.
- Install the device in the place where the maintenance personnel can operate easily.

- Disconnect the power supply when you have the device serviced.
- The temperature of the cover area will be high when the device is working. In the circumstances, only personnel with relevant professional knowledge, such as installation and maintenance personnel, are allowed to operate the device.

Pole Installation

Mount the device on the pole with a diameter of 40 to 100 mm using the attached cable tie. Please read and follow the steps:

1. Thread the cable ties into the installation holes at the back of the device.

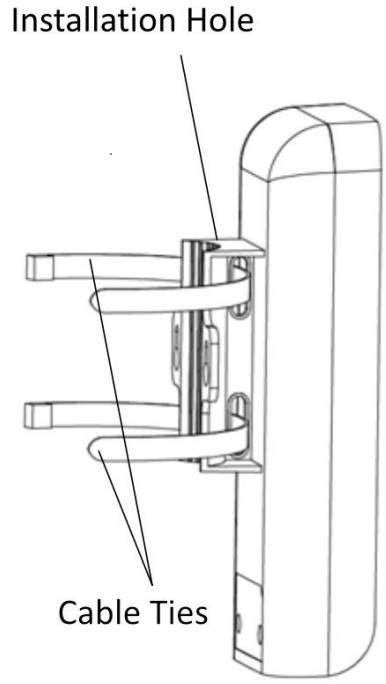

Figure 2-5 Thread Cable Ties

2. Fix and fasten the cable ties on the pole.

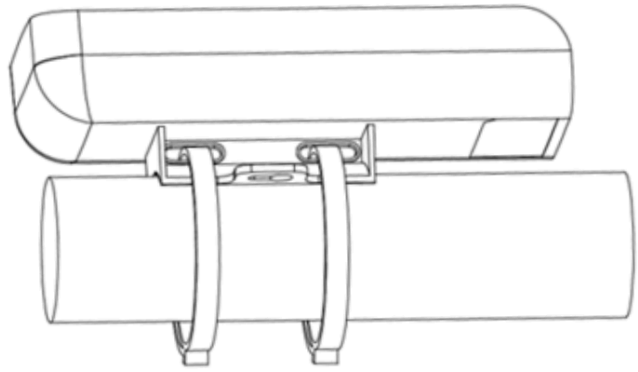

Figure 2-6 Fix Device

Note

Adjust the direction of the device manually to keep the device installed horizontally.

Device Connection

Based on the actual situations, connect the device according to the following wiring steps.

Note

- Use the attached the power adapter and PoE injector to power on the device.
- The PoE injector must be connected to an earthed socket outlet.
- The devices in the package should be used in pair and cannot be used arbitrarily together with another incompatible device.

1. **AP connection:**

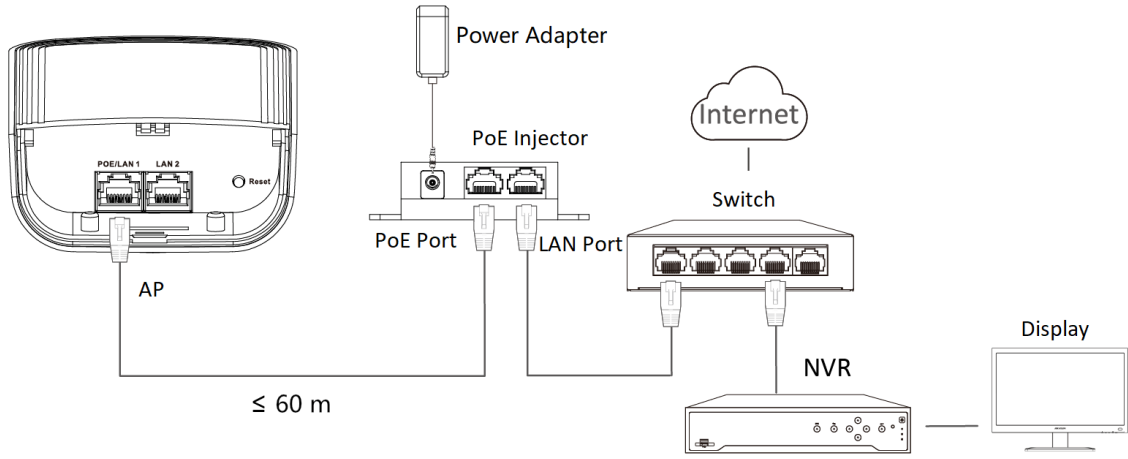

Figure 2-7 AP Connection

2. **CPE connection:**

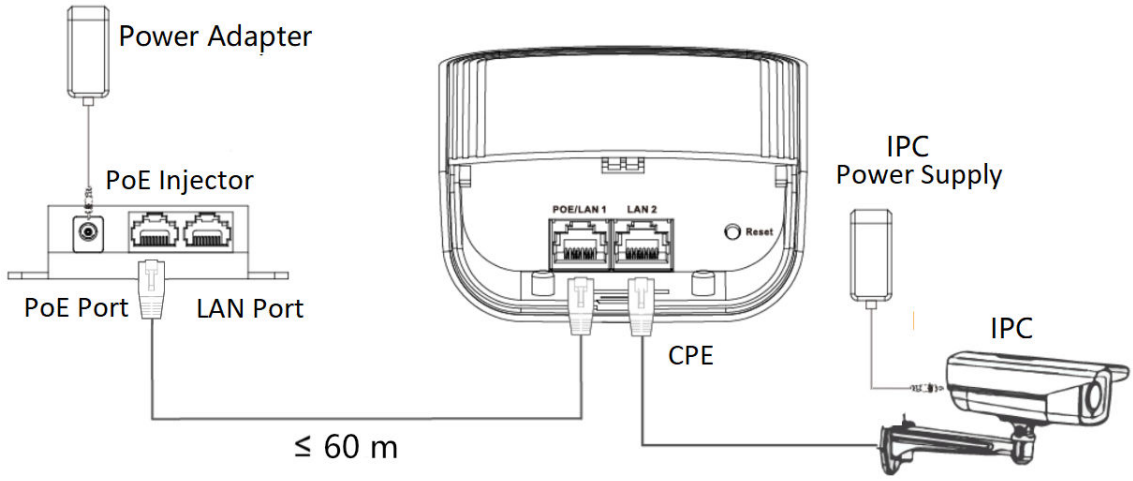

Figure 2-8 CPE Connection

3. After you finish the device connection, check device working status, network connection, and signal strength according to indicators.

2.1.2 DS-3WF0BC-2NT(B)

The 2.4 GHz wireless bridge (hereinafter referred to as *the device*) is used for wireless transmission within 200 m and is suitable for wireless video transmission in elevators .

Packing List

Please check if there is any damage of the package first. According to the packing list, make sure no item is lost. After checking all the items included, you can continue to install the device.

Table 2-4 Packing List

Item	Appearance	Quantity
Wireless Bridge	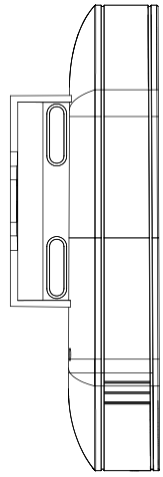	× 2
PoE Injector	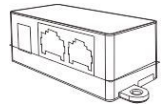	× 2
Power Adapter	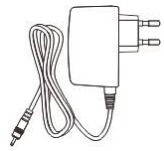	× 2
Cable Tie		× 4
Quick Start Guide	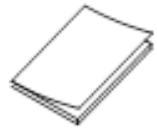	× 1
Regulatory Compliance and Safety Information	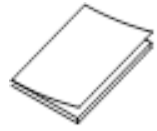	× 1

Note

The device image used here is only for example purpose. The actual device may vary with models.

Interface/Button

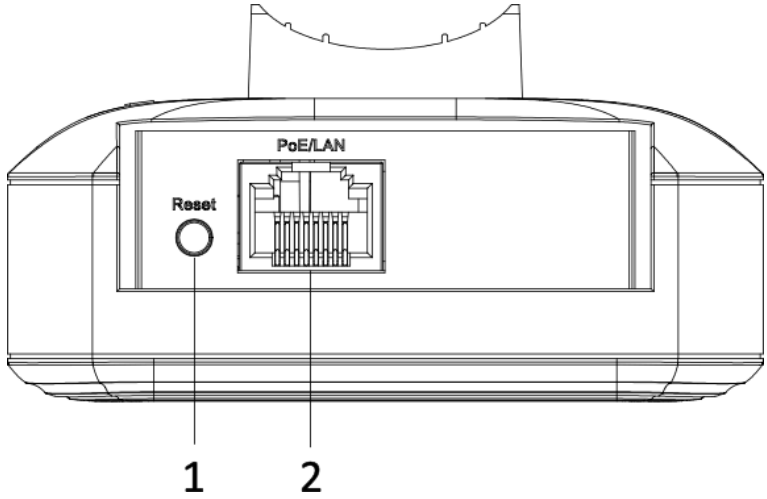

Figure 2-9 Device Interface/Button

Table 2-5 Device Interface/Button Description

No.	Interface/Button	Description
1	Reset	Long press for 4 seconds to restore to factory settings.
2	PoE/LAN	The 10/100 Mbps adaptive RJ45 port, also can be used as a PoE port.

Indicator

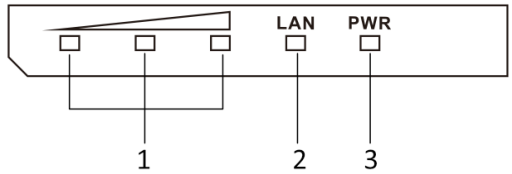

Figure 2-10 Device Indicator

Table 2-6 Device Indicator Description

No.	Indicator	Description	
1	Signal Strength Indicator	Solid on	The devices are matched. • Solid red, yellow, and green: The wireless signal is strong. • Solid red and yellow, unlit green: The wireless signal is normal. • Solid red, unlit yellow and green: The wireless signal is weak. Please adjust the position and direction of the device.
		Unlit	The devices are not matched.
2	LAN Indicator	Solid Green	The port is connected.
		Flashing Green	The port is transmitting data. The faster the indicator flashes, the greater the transmission rate is.
		Unlit	The port is disconnected or connection is abnormal.
3	Power Indicator	Solid Green	The device is powered on normally
		Unlit	No power supply connected or power supply is abnormal.

Application Scene

Note

- The following application scenes are for your reference only. The actual scene prevails.
- The device image used here is only for example purpose. The actual device may vary with models.

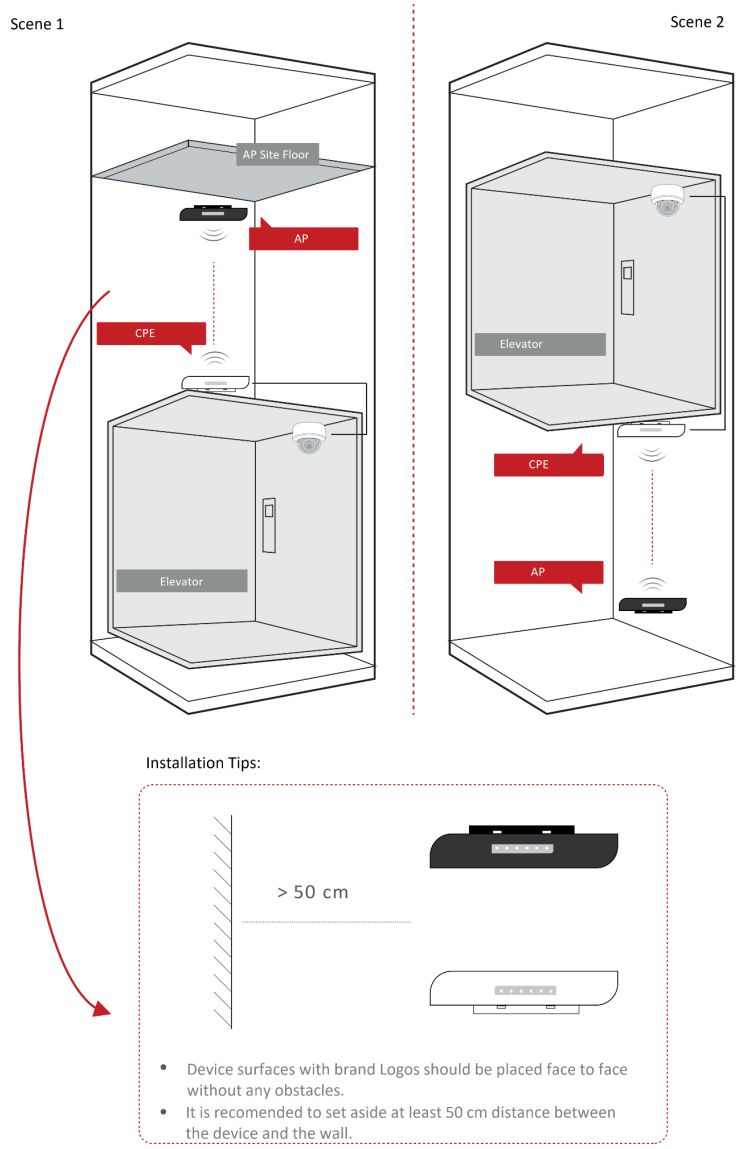

Figure 2-11 Application Scene

Preparation for Installation

To avoid device damage or personal injury caused by improper usage of the device, please follow the preparations below.

- Use the attached power adapter and PoE injector to power the device.
- The distance between AP and CPE should be less than 200 m to secure transmission rate.
- Set aside at least 50 cm distance between the device and the wall.
- At least 2 m distance should be kept between two adjacent devices.
- The devices should be installed face to face and the max. angle of deviation is 30°.
- Install the device in the place where the maintenance personnel can operate easily.

- Disconnect the power supply when you have the device serviced.
- The temperature of the cover area will be high when the device is working. In the circumstances, only personnel with relevant professional knowledge, such as installation and maintenance personnel, are allowed to operate the device.

Pole Installation

Mount the device on the pole with a diameter of 40 to 100 mm using the attached cable tie. Please read and follow the steps:

Note

The wireless bridge is a pair of devices with different colored shells (one is black and another is white). Please be sure to install the black one on the AP scene and the white one on the CPE scene. Otherwise, it may cause transmission abnormalities.

1. Check the label and color of the device to confirm working scene.
   - AP: Black shell labelled with **Only for AP**.
   - CPE: White shell labelled with **Only for CPE**.

Only for CPE

Figure 2-13 CPE Label (Sample)

2. Thread the cable ties into the installation holes at the back of the device.

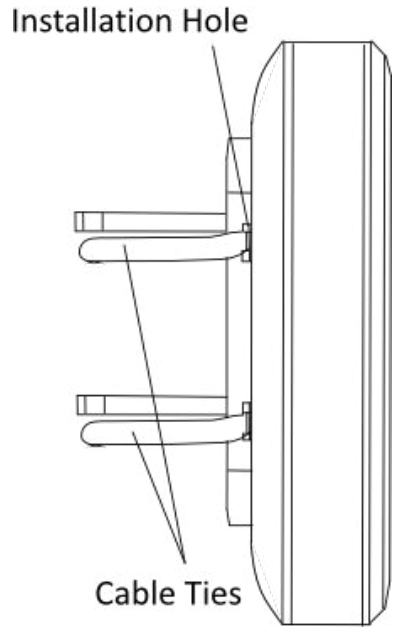

Figure 2-14 Thread Cable Ties

3. Fix and fasten the cable ties on the pole.

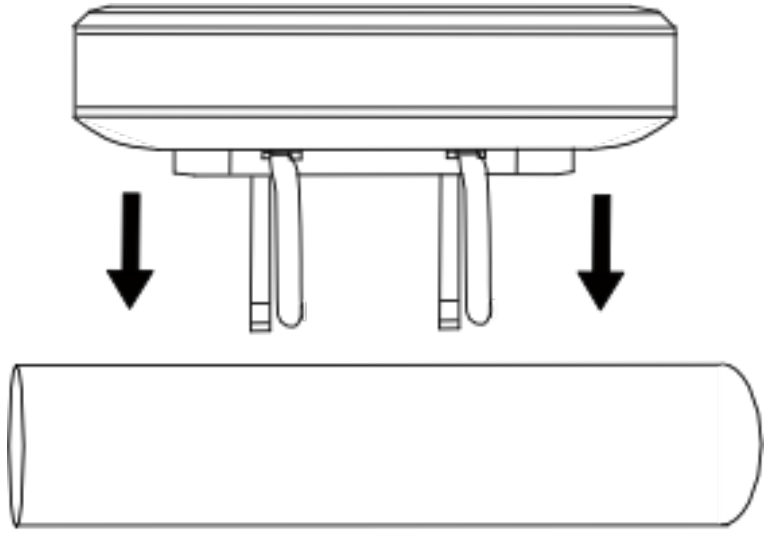

Figure 2-15 Fix Device

Note

Adjust the direction of the device manually to keep the device installed horizontally.

Device Connection

Based on the actual situations, connect the device according to the following wiring steps.

Note

- Use the attached the power adapter and PoE injector to power on the device.
- The PoE injector must be connected to an earthed socket outlet.
- The devices in the package should be used in pair and cannot be used arbitrarily together with another incompatible device.

1. **AP connection:**

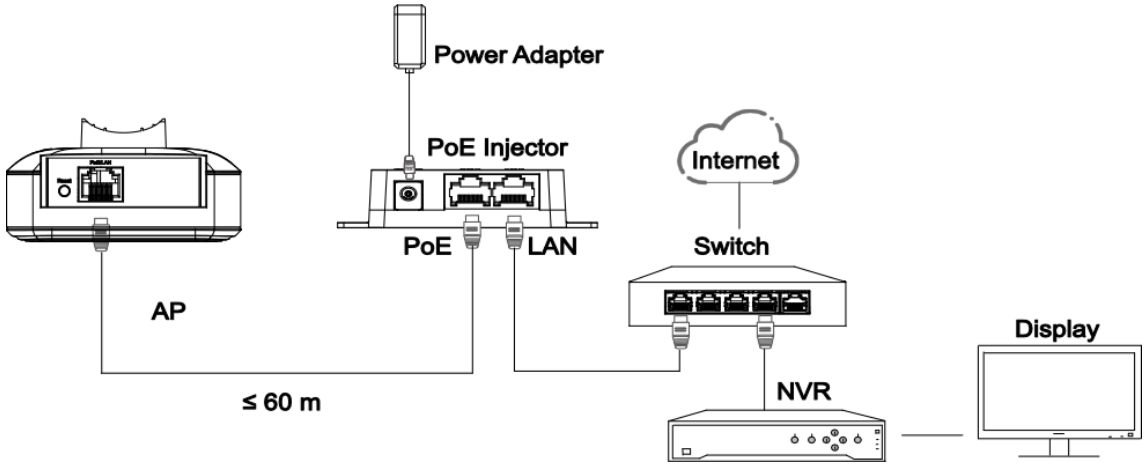

Figure 2-16 AP Connection

2. **CPE connection:**

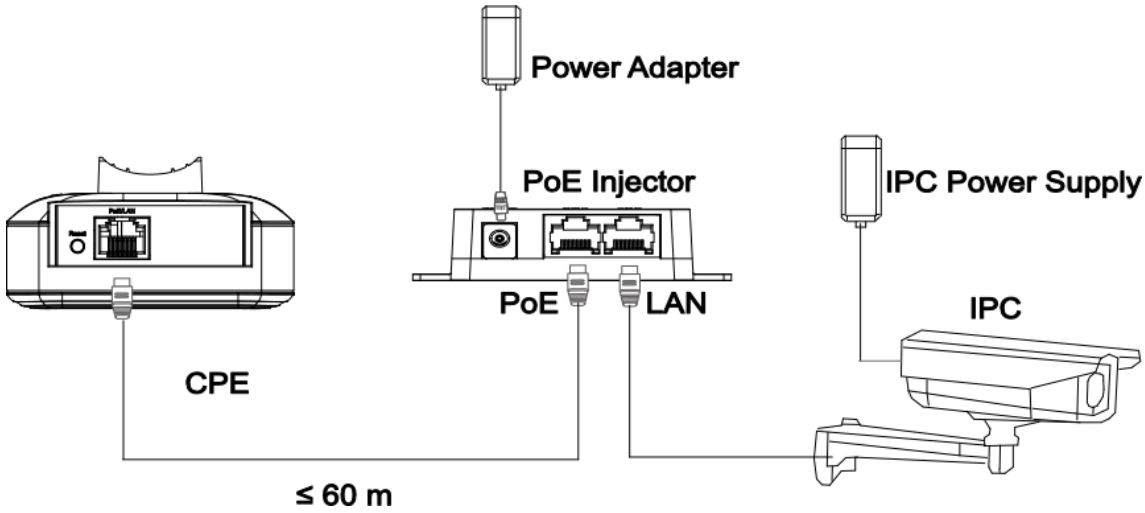

Figure 2-17 CPE Connection

3. After you finish the device connection, check device working status, network connection, and signal strength according to indicators.

2.2 2.4GHz 500m

2.2.1 DS-3WF0EC-2NT

The 2.4 GHz wireless bridge (hereinafter referred to as *the device*) is used for wireless transmission within 500 m and is suitable for wireless video transmission in elevators .

Packing List

Please check if there is any damage of the package first. According to the packing list, make sure no item is lost. After checking all the items included, you can continue to install the device.

Table 2-7 Packing List

Item	Appearance	Quantity
Wireless Bridge	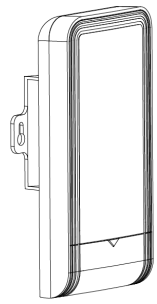	× 2
PoE Injector	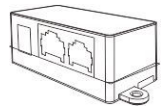	× 2
Power Adapter	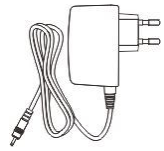	× 2
Cable Tie		× 4
Quick Start Guide	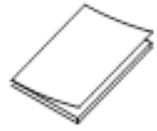	× 1
Regulatory Compliance and Safety Information	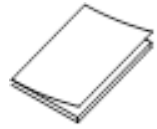	× 1

Note

The device image used here is only for example purpose. The actual device may vary with models.

Interface/Button

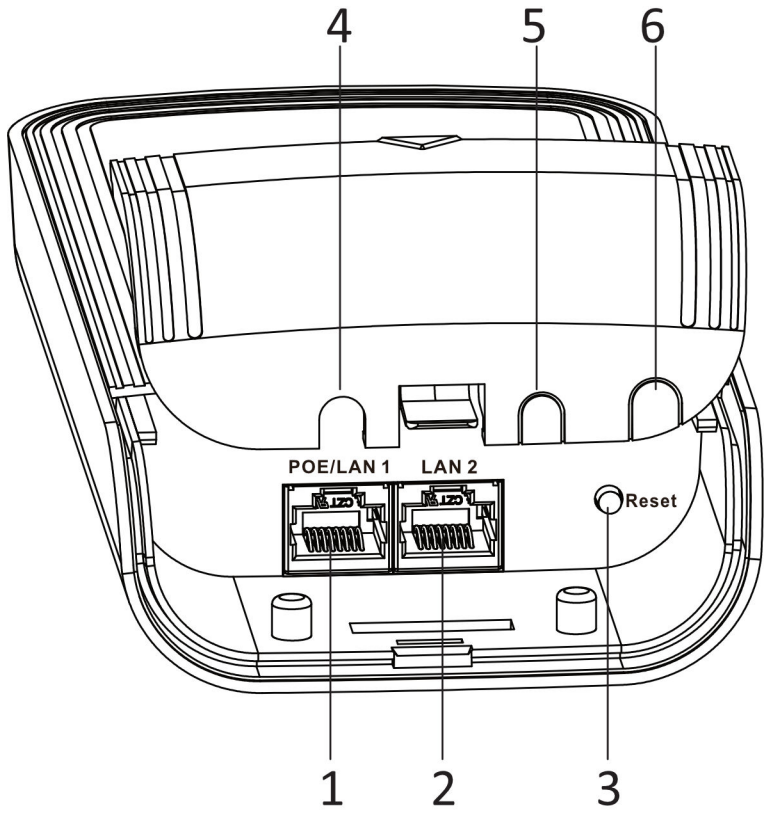

Figure 2-18 Device Interface/Button

Table 2-8 Device Interface/Button Description

No.	Interface/Button	Description
1	PoE/LAN 1	The 10/100 Mbps adaptive RJ45 port, also can be used as a PoE port.
2	LAN 2	The 10/100 Mbps adaptive RJ45 port.
3	Reset	Long press for 4 seconds to restore to factory settings.
4/5/6	Network Cable Slot	Reserved for easy placement of the network cables.

Indicator

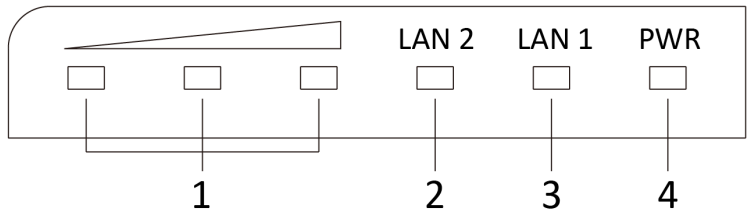

Figure 2-19 Device Indicator

Table 2-9 Device Indicator Description

No.	Indicator	Description	
1	Signal Strength Indicator	Solid on	The devices are matched. • Solid red, yellow, and green: The wireless signal is strong. • Solid red and yellow, unlit green: The wireless signal is normal. • Solid red, unlit yellow and green: The wireless signal is weak. Please adjust the position and direction of the device.
		Unlit	The devices are not matched.
2/3	LAN 2/LAN Indicator	Solid Green	The port is connected.
		Flashing Green	The port is transmitting data. The faster the indicator flashes, the greater the transmission rate is.
		Unlit	The port is disconnected or connection is abnormal.
4	Power Indicator	Solid Green	The device is powered on normally
		Unlit	No power supply connected or power supply is abnormal.

Application Scene

Note

- The following application scenes are for your reference only. The actual scene prevails.
- The device image used here is only for example purpose. The actual device may vary with models.

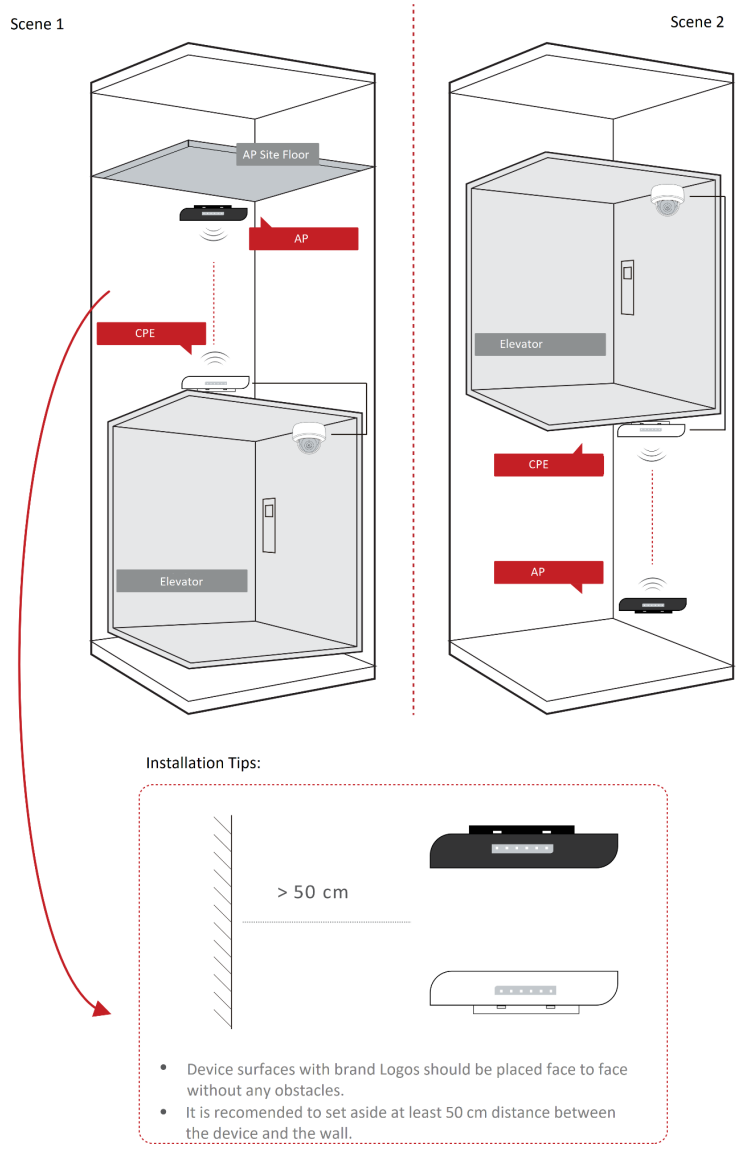

Figure 2-20 Application Scene

Preparation for Installation

To avoid device damage or personal injury caused by improper usage of the device, please follow the preparations below.

- Use the attached power adapter and PoE injector to power the device.
- The distance between AP and CPE should be less than 500 m to secure transmission rate.
- Set aside at least 50 cm distance between the device and the wall.
- At least 2 m distance should be kept between two adjacent devices.
- The devices should be installed face to face and the max. angle of deviation is 30°.
- Install the device in the place where the maintenance personnel can operate easily.

- Disconnect the power supply when you have the device serviced.
- The temperature of the cover area will be high when the device is working. In the circumstances, only personnel with relevant professional knowledge, such as installation and maintenance personnel, are allowed to operate the device.

Pole Installation

Mount the device on the pole with a diameter of 40 to 100 mm using the attached cable tie. Please read and follow the steps:

1. Thread the cable ties into the installation holes at the back of the device.

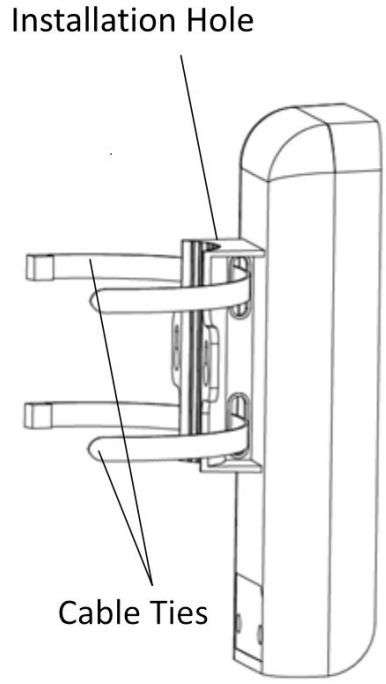

Figure 2-21 Thread Cable Ties

2. Fix and fasten the cable ties on the pole.

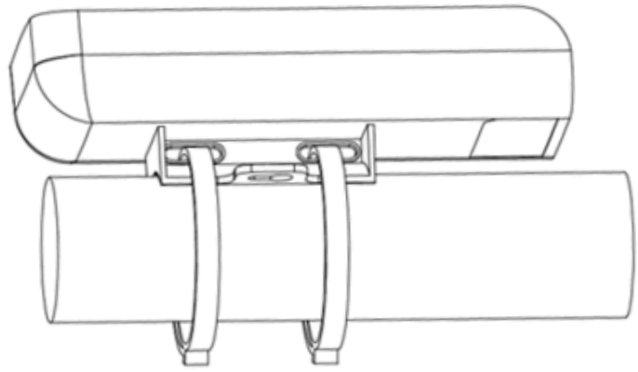

Figure 2-22 Fix Device

Note

Adjust the direction of the device manually to keep the device installed horizontally.

Device Connection

Based on the actual situations, connect the device according to the following wiring steps.

Note

- Use the attached the power adapter and PoE injector to power on the device.
- The PoE injector must be connected to an earthed socket outlet.
- The devices in the package should be used in pair and cannot be used arbitrarily together with another incompatible device.

1. **AP connection:**

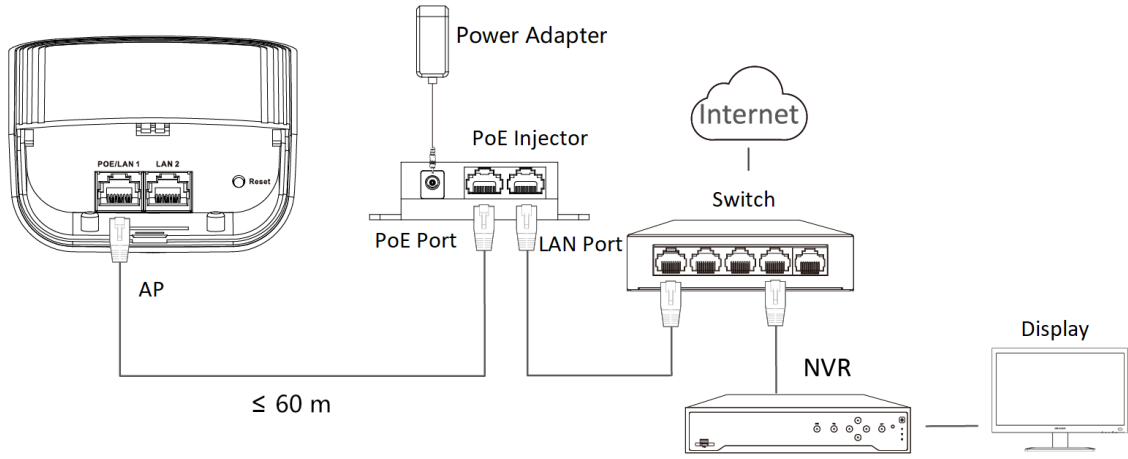

Figure 2-23 AP Connection

2. **CPE connection:**

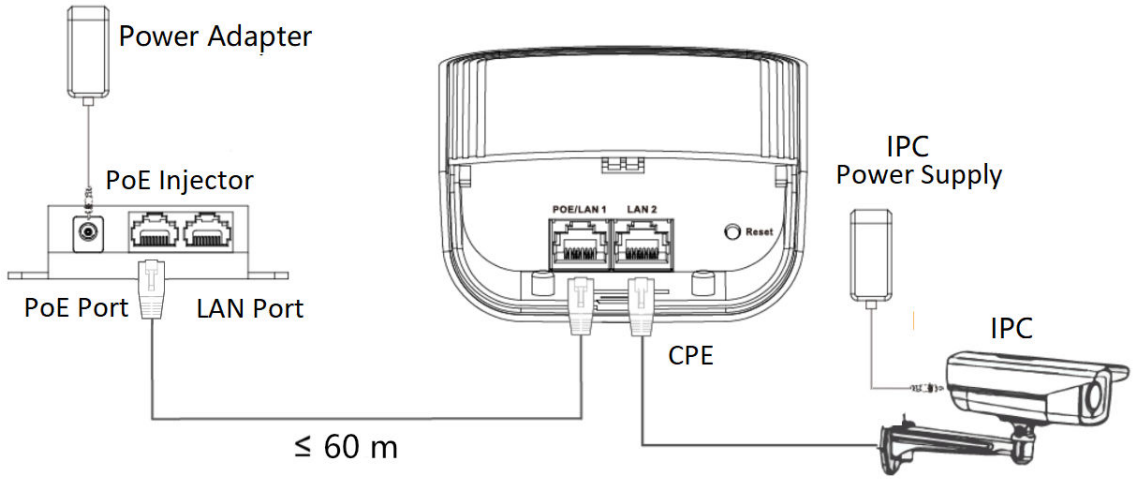

Figure 2-24 CPE Connection

3. After you finish the device connection, check device working status, network connection, and signal strength according to indicators.

2.3 5GHz 500m

2.3.1 DS-3WF0EC-5ACT

The 5 GHz wireless bridge (hereinafter referred to as *the device*) is used for wireless transmission within 500 m and is suitable for wireless video transmission in elevators .

Packing List

Please check if there is any damage of the package first. According to the packing list, make sure no item is lost. After checking all the items included, you can continue to install the device.

Table 2-10 Packing List

Item	Appearance	Quantity
Wireless Bridge	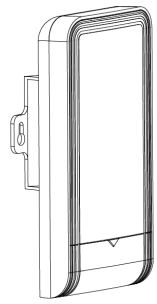	× 2
PoE Injector	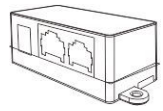	× 2
Power Adapter	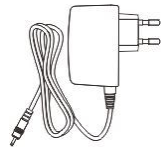	× 2
Cable Tie		× 4
Quick Start Guide	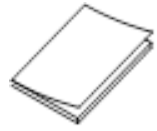	× 1
Regulatory Compliance and Safety Information	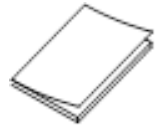	× 1

Note

The device image used here is only for example purpose. The actual device may vary with models.

Interface/Button

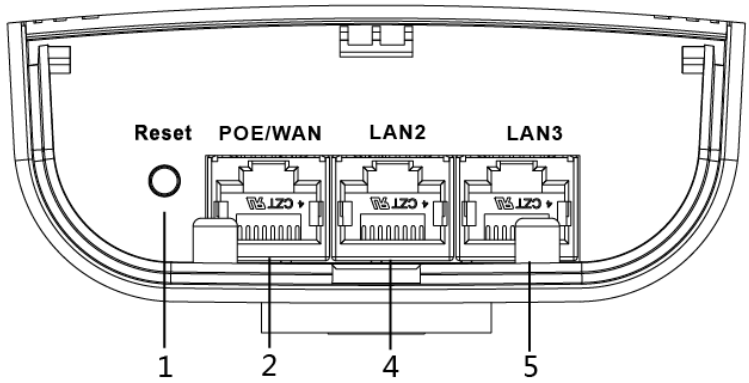

Figure 2-25 AP Device Interface/Button

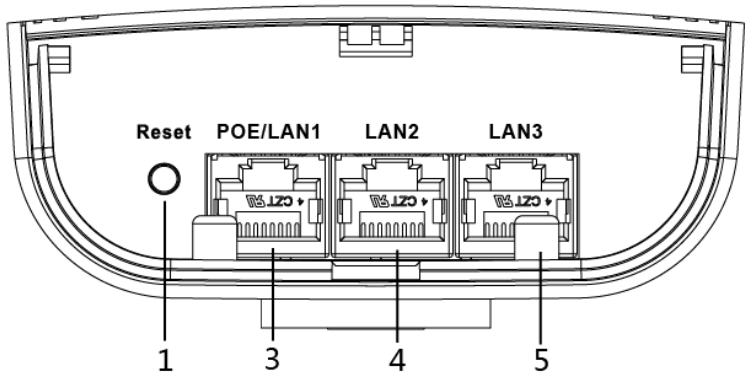

Figure 2-26 CPE Device Interface/Button

Table 2-11 Device Interface/Button Description

No.	Interface/Button	Description
1	Reset	Long press for 4 seconds to restore to factory settings.
2	PoE/WAN	The 10/100 Mbps adaptive RJ45 port, also can be used as a PoE port.
3	PoE/LAN 1	The 10/100 Mbps adaptive RJ45 port, also can be used as a PoE port.
4/5/6	LAN 2?LAN 3	The 10/100 Mbps adaptive RJ45 port.

Indicator

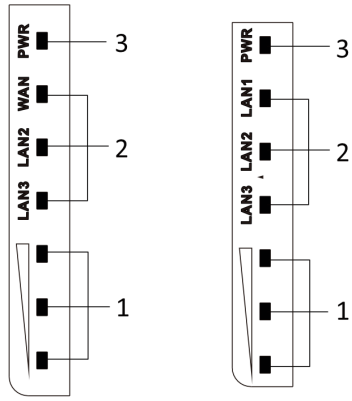

AP Indicator CPE Indicator

Figure 2-27 Device Indicator

Table 2-12 Device Indicator Description

No.	Indicator	Description	
1	Signal Strength Indicator	Solid on	The devices are matched. • Solid red, yellow, and green: The wireless signal is strong. • Solid red and yellow, unlit green: The wireless signal is normal. • Solid red, unlit yellow and green: The wireless signal is weak. Please adjust the position and direction of the device.
		Unlit	The devices are not matched.
2/3	Network Port Indicator	Solid Green	The port is connected.
		Flashing Green	The port is transmitting data. The faster the indicator flashes, the greater the transmission rate is.
		Unlit	The port is disconnected or connection is abnormal.
4	Power Indicator	Solid Green	The device is powered on normally
		Unlit	No power supply connected or power supply is abnormal.

Application Scene

Note

- The following application scenes are for your reference only. The actual scene prevails.
- The device image used here is only for example purpose. The actual device may vary with models.

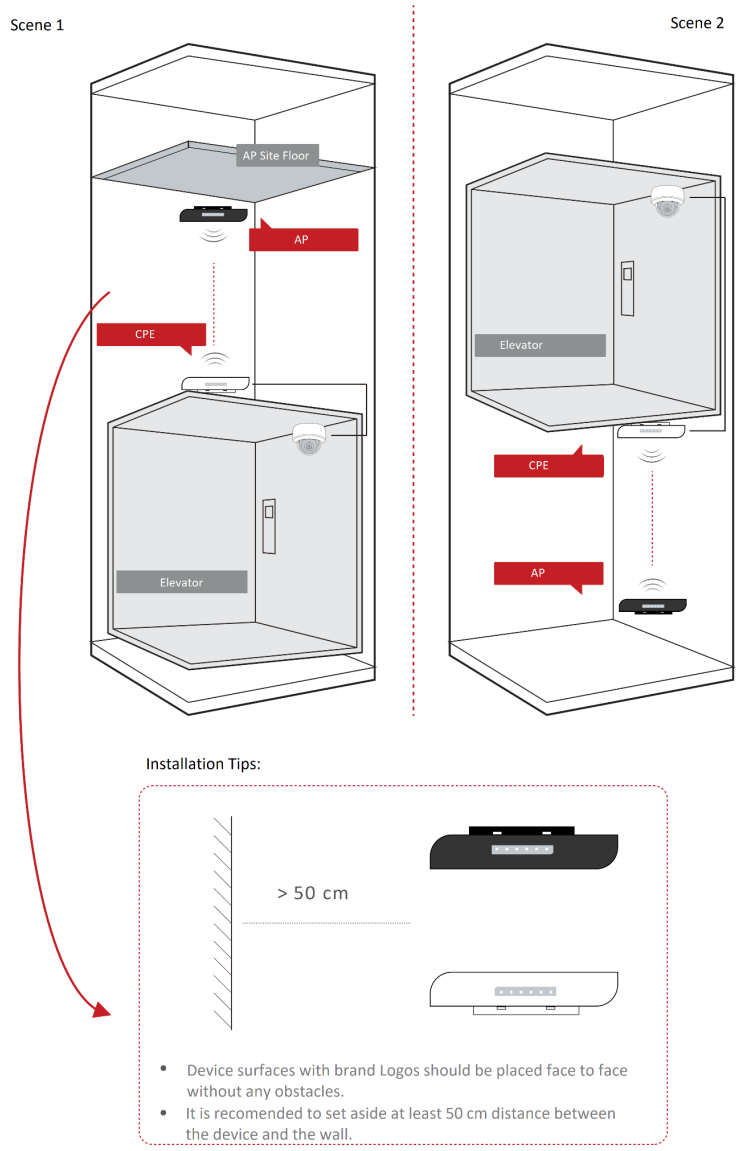

Figure 2-28 Application Scene

Preparation for Installation

To avoid device damage or personal injury caused by improper usage of the device, please follow the preparations below.

- Use the attached power adapter and PoE injector to power the device.
- The distance between AP and CPE should be less than 500 m to secure transmission rate.
- Set aside at least 50 cm distance between the device and the wall.
- At least 2 m distance should be kept between two adjacent devices.
- The devices should be installed face to face and the max. angle of deviation is 30°.
- Install the device in the place where the maintenance personnel can operate easily.
- Disconnect the power supply when you have the device serviced.
- The temperature of the cover area will be high when the device is working. In the circumstances, only personnel with relevant professional knowledge, such as installation and maintenance personnel, are allowed to operate the device.

Pole Installation

Mount the device on the pole with a diameter of 40 to 100 mm using the attached cable tie. Please read and follow the steps:

1. Thread the cable ties into the installation holes at the back of the device.

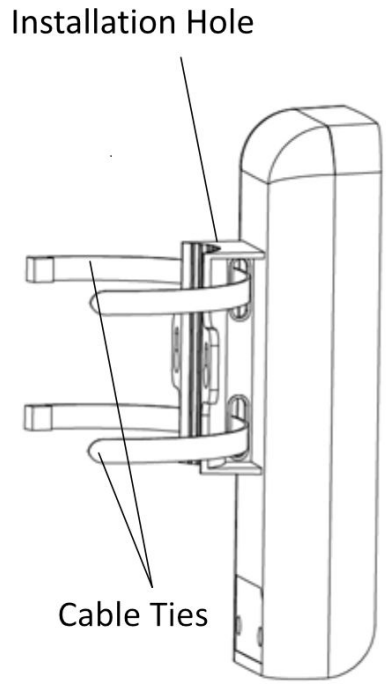

Figure 2-29 Thread Cable Ties

2. Fix and fasten the cable ties on the pole.

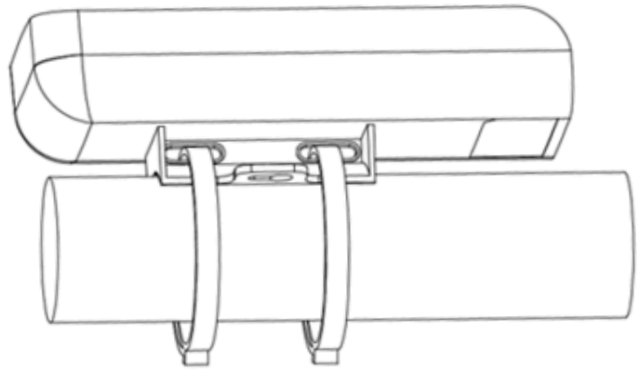

Figure 2-30 Fix Device

Note

Adjust the direction of the device manually to keep the device installed horizontally.

Device Connection

Based on the actual situations, connect the device according to the following wiring steps.

Note

- Use the attached the power adapter and PoE injector to power on the device.
- The PoE injector must be connected to an earthed socket outlet.
- The devices in the package should be used in pair and cannot be used arbitrarily together with another incompatible device.

1. **AP connection:** The AP device can work in two modes, namely wireless bridge mode and routing mode.

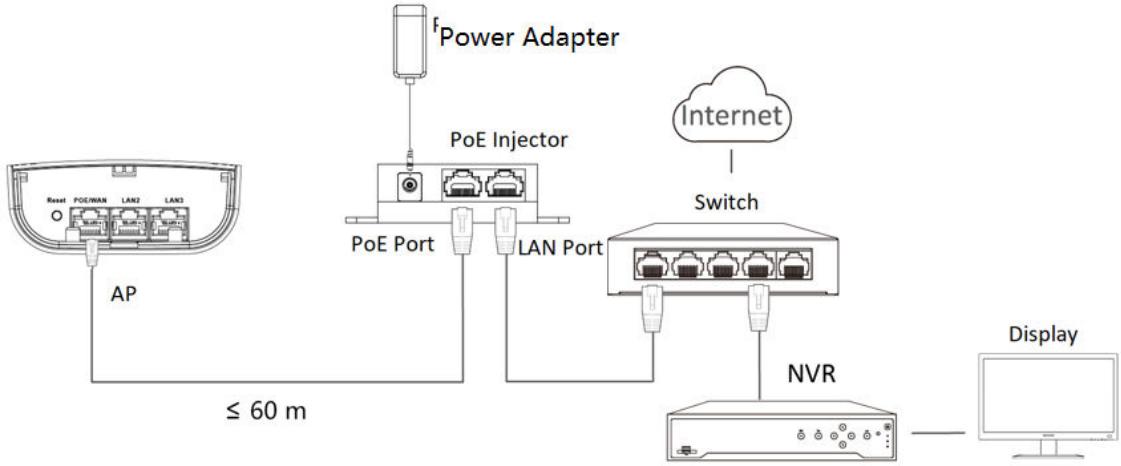

Figure 2-31 AP Connection (Wireless Bridge Mode)

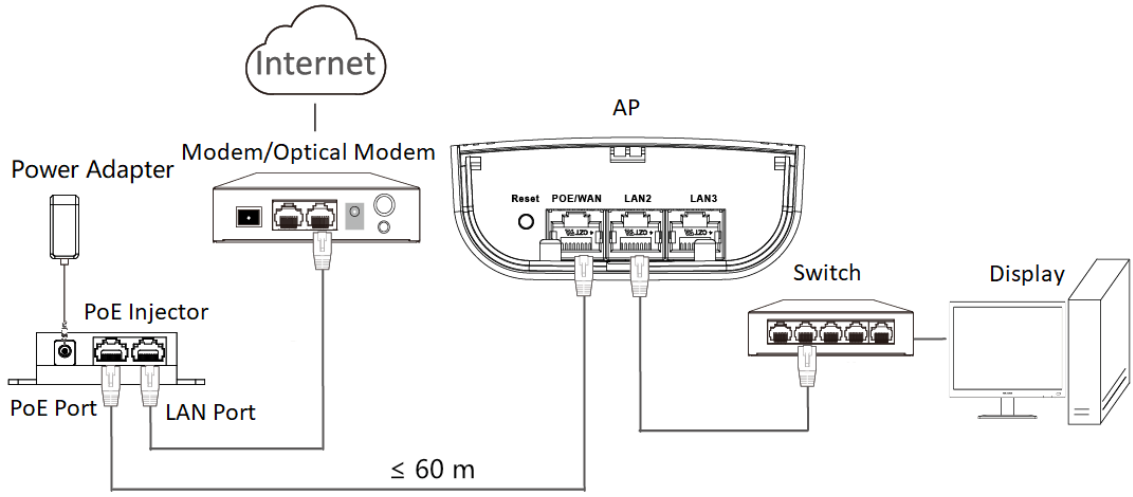

Figure 2-32 AP Connection (Routing Mode)

2. **CPE connection:**

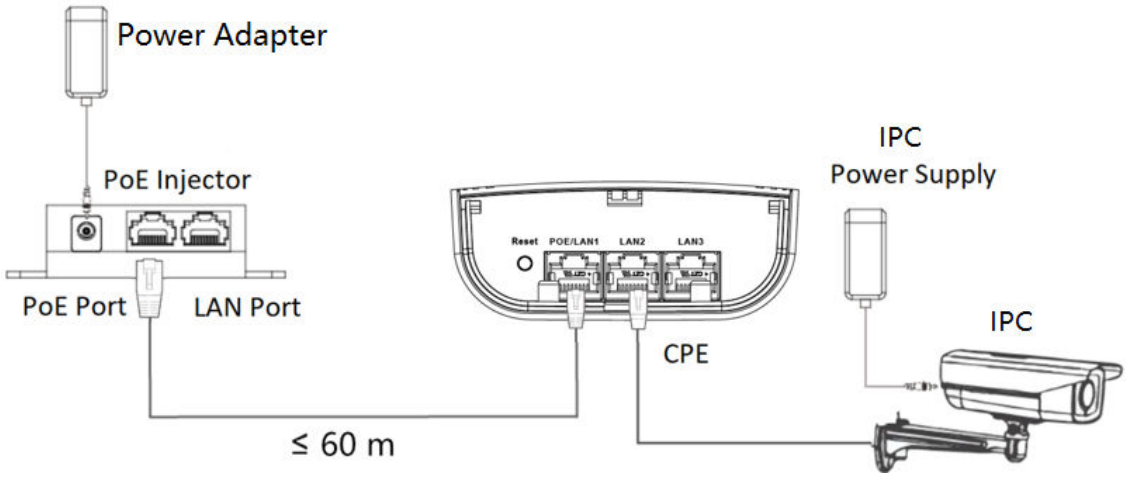

Figure 2-33 CPE Connection

3. After you finish the device connection, check device working status, network connection, and signal strength according to indicators.

2.3.2 DS-3WF0EC-5ACT(B)

The 5 GHz wireless bridge (hereinafter referred to as *the device*) is used for wireless transmission within 500 m and is suitable for wireless video transmission in elevators .

Packing List

Please check if there is any damage of the package first. According to the packing list, make sure no item is lost. After checking all the items included, you can continue to install the device.

Table 2-13 Packing List

Item	Appearance	Quantity
Wireless Bridge	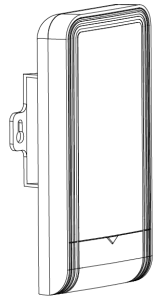	× 2
PoE Power Supply	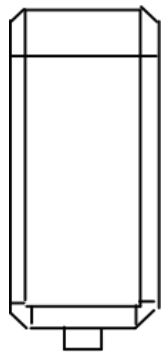	× 2
AC Cord (Connect to the PoE Power Supply)	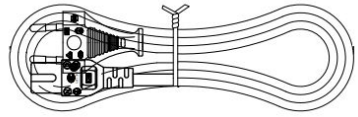	× 2
Cable Tie		× 4

Item	Appearance	Quantity
Quick Start Guide	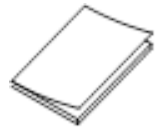	× 1
Regulatory Compliance and Safety Information	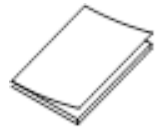	× 1

Note

The device image used here is only for example purpose. The actual device may vary with models.

Interface/Button

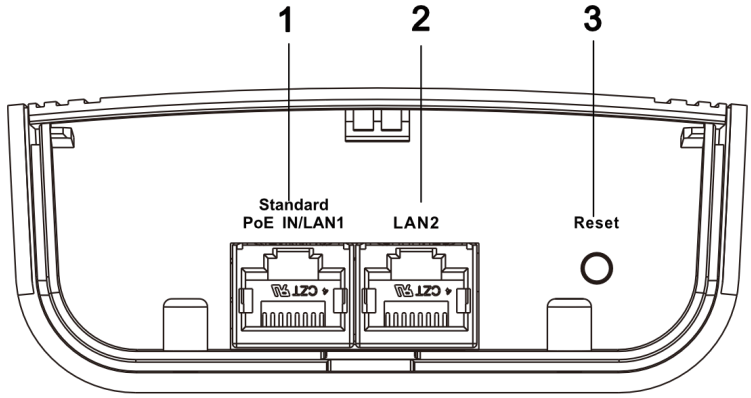

Figure 2-34 AP Device Interface/Button

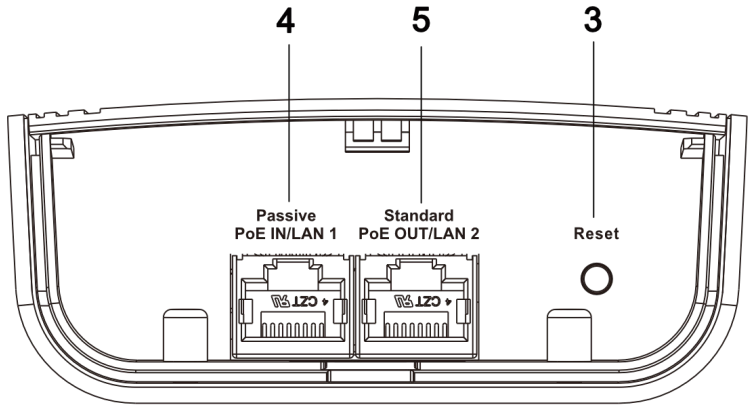

Figure 2-35 CPE Device Interface/Button

Table 2-14 Device Interface/Button Description

No.	Interface/Button	Description
1	Standard PoE IN/LAN 1	The 10/100 Mbps adaptive RJ45 port, also can be used as a standard PoE input port.
2	LAN 2	The 10/100 Mbps adaptive RJ45 port.
3	Reset	Long press for 4 seconds to restore to factory settings.
4	Passive PoE IN/LAN 1	The 10/100 Mbps adaptive RJ45 port, also can be used as a passive PoE input port.
5	Standard PoE OUT/LAN 2	The 10/100 Mbps adaptive RJ45 port, also can be used as a standard PoE output port.

Indicator

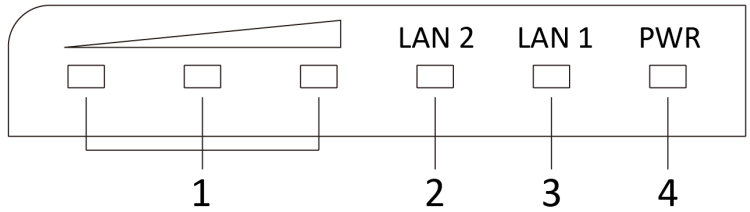

Figure 2-36 Device Indicator

Table 2-15 Device Indicator Description

No.	Indicator	Description	
1	Signal Strength Indicator	Solid on	The devices are matched. • Solid red, yellow, and green: The wireless signal is strong. • Solid red and yellow, unlit green: The wireless signal is normal. • Solid red, unlit yellow and green: The wireless signal is weak. Please adjust the position and direction of the device.
		Unlit	The devices are not matched.
2/3	LAN 2/LAN Indicator	Solid Green	The port is connected.
		Flashing Green	The port is transmitting data. The faster the indicator flashes, the greater the transmission rate is.
		Unlit	The port is disconnected or connection is abnormal.
4	Power Indicator	Solid Green	The device is powered on normally
		Unlit	No power supply connected or power supply is abnormal.

Application Scene

Note

- The following application scenes are for your reference only. The actual scene prevails.
- The device image used here is only for example purpose. The actual device may vary with models.

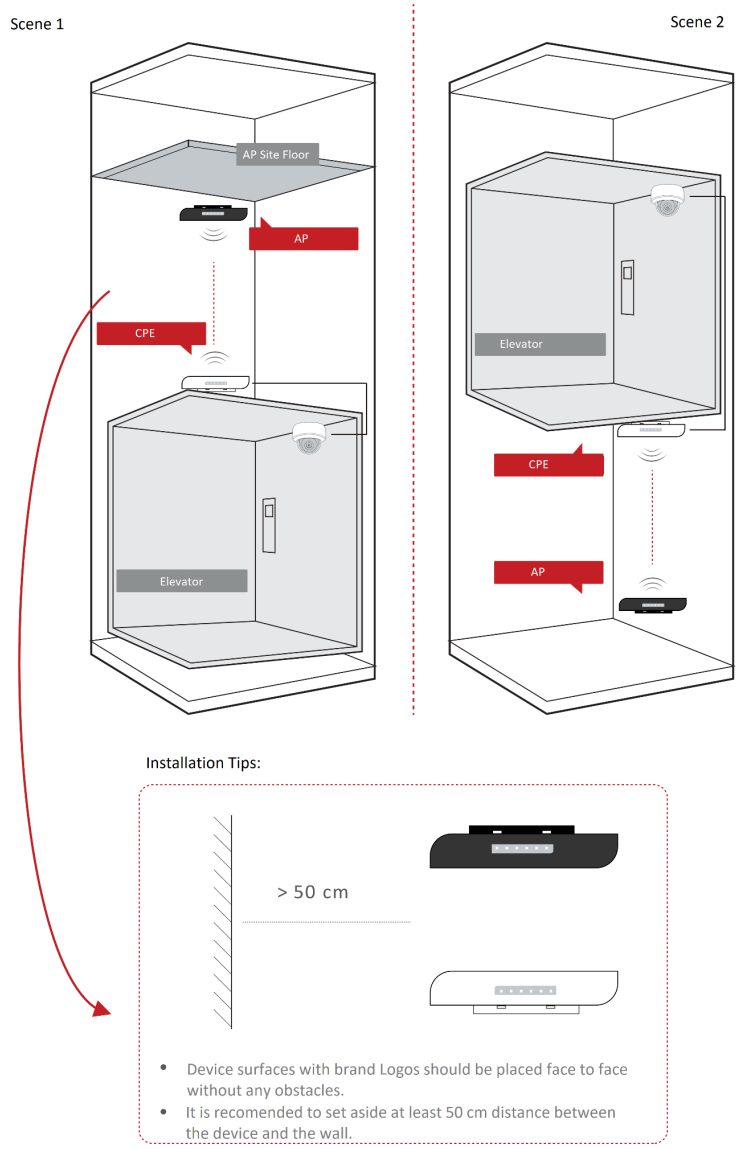

Figure 2-37 Application Scene

Preparation for Installation

To avoid device damage or personal injury caused by improper usage of the device, please follow the preparations below.

- Use the attached PoE power supply to power the device.
- The distance between AP and CPE should be less than 500 m to secure transmission rate.
- Set aside at least 50 cm distance between the device and the wall.
- At least 2 m distance should be kept between two adjacent devices.
- The devices should be installed face to face and the max. angle of deviation is 30°.
- Install the device in the place where the maintenance personnel can operate easily.

- Disconnect the power supply when you have the device serviced.
- The temperature of the cover area will be high when the device is working. In the circumstances, only personnel with relevant professional knowledge, such as installation and maintenance personnel, are allowed to operate the device.

Pole Installation

Mount the device on the pole with a diameter of 40 to 100 mm using the attached cable tie. Please read and follow the steps:

Note

The wireless bridge is a pair of devices with different colored shells (one is black and another is white). Please be sure to install the black one on the AP scene and the white one on the CPE scene. Otherwise, it may cause transmission abnormalities.

1. Thread the cable ties into the installation holes at the back of the device.

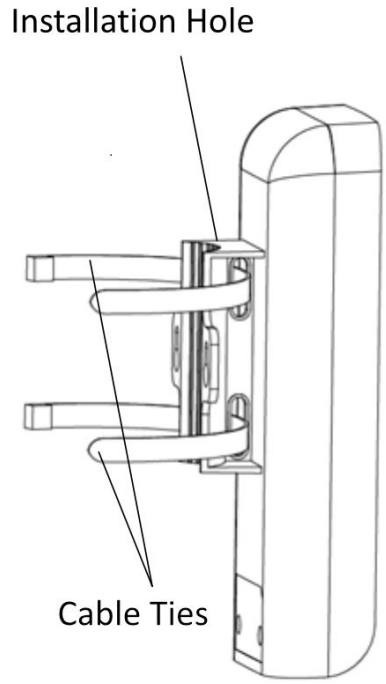

Figure 2-38 Thread Cable Ties

2. Fix and fasten the cable ties on the pole.

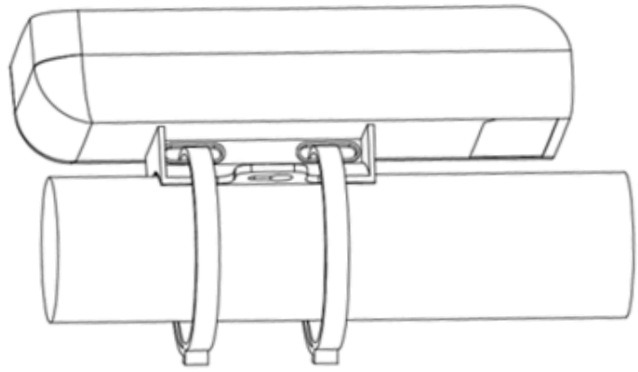

Figure 2-39 Fix Device

Note

Adjust the direction of the device manually to keep the device installed horizontall.

Device Connection

Based on the actual situations, connect the device according to the following wiring steps.

Note

- Use the attached PoE power supply to power on the device.
- The PoE power supply must be connected to an earthed socket outlet.
- The devices in the package should be used in pair and cannot be used arbitrarily together with another incompatible device.

1. **AP connection:** Power on the AP device by the PoE power supply or a PoE switch.

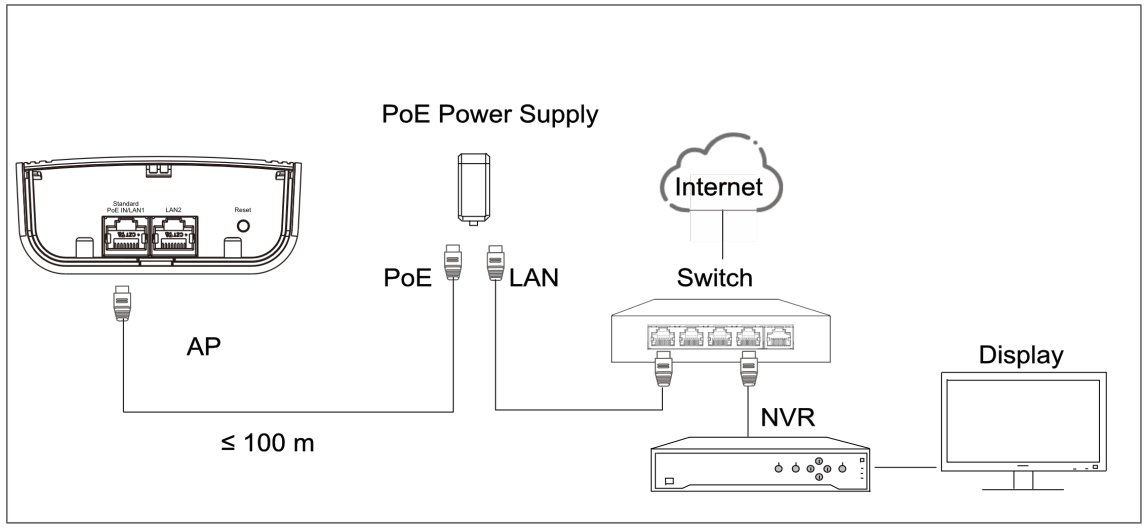

Figure 2-40 AP Connection (With PoE Power Supply)

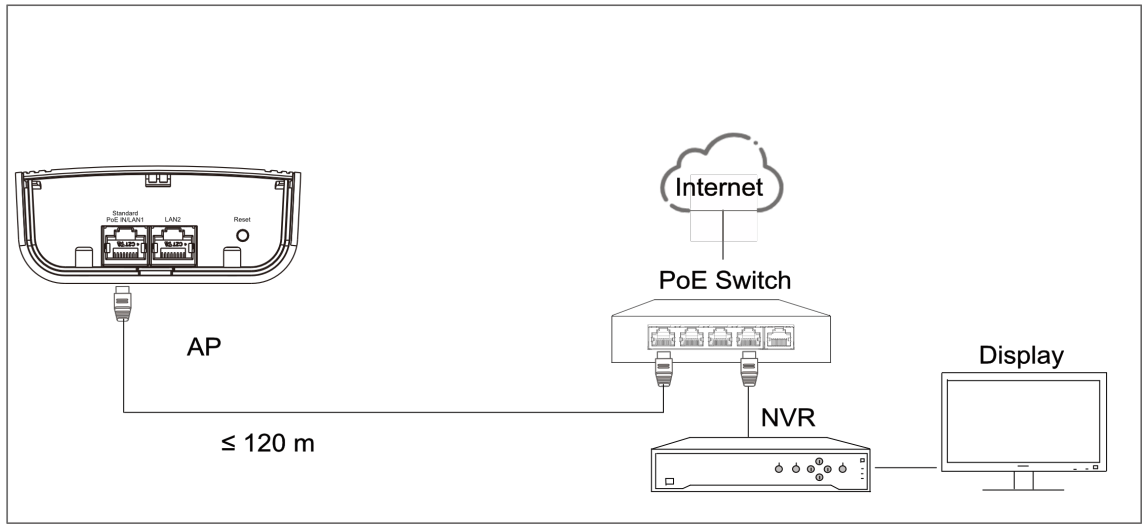

Figure 2-41 AP Connection (With PoE Switch)

2. **CPE connection:**

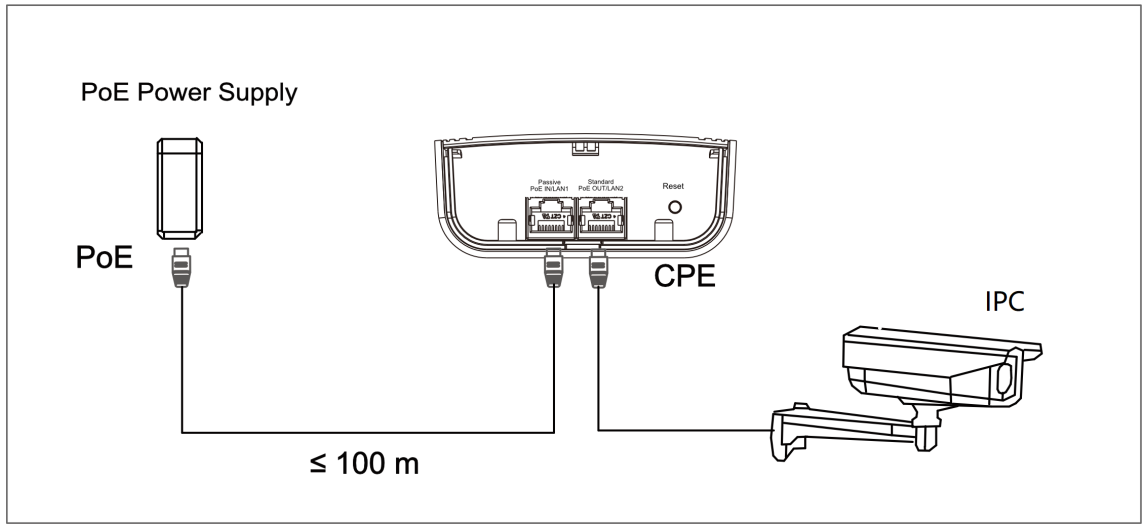

Figure 2-42 CPE Connection

3. After you finish the device connection, check device working status, network connection, and signal strength according to indicators.

Chapter 3 Outdoor Series

This series of devices are suitable for outdoor video transmission.

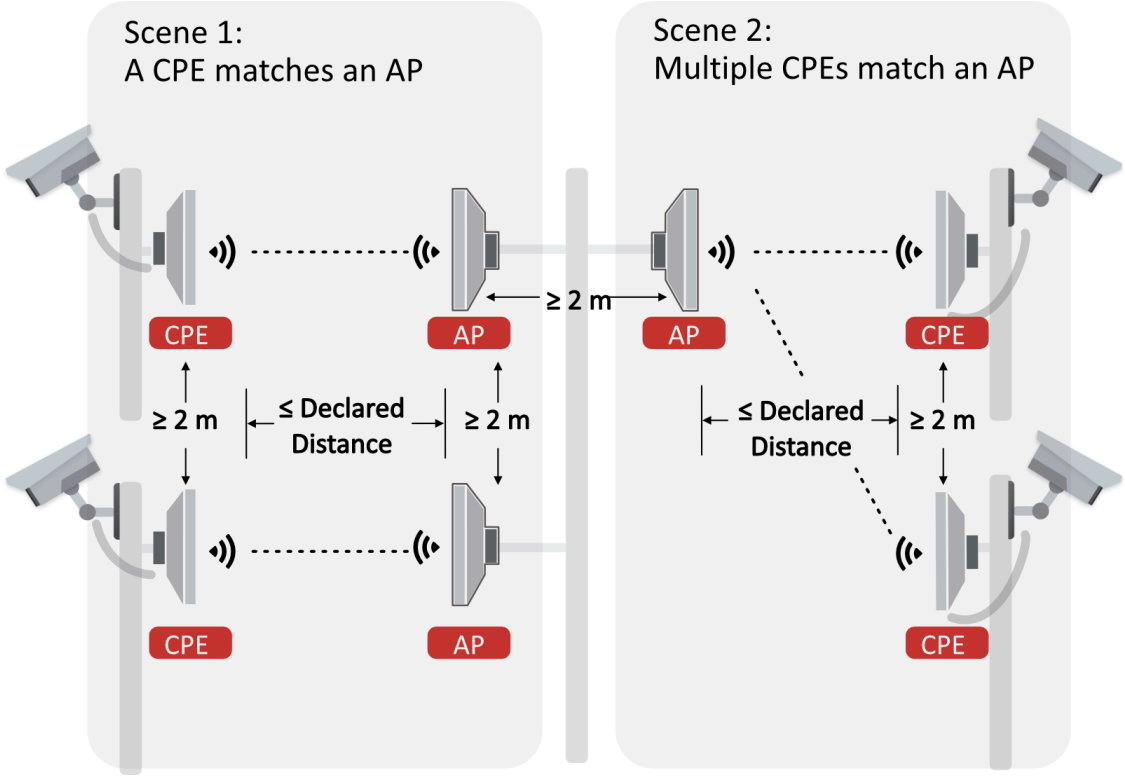

Figure 3-1 Application Scene

3.1 2.4GHz 500m

3.1.1 DS-3WF500-EI-2N

The 2.4 GHz wireless bridge (hereinafter referred to as *the device*) is used for wireless transmission within 500 m. It supports point-to-point transmission and can guarantee the multi-channel HD video transmission for outdoor video security.

Packing List

Please check if there is any damage of the package first. According to the packing list, make sure no item is lost. After checking all the items included, you can continue to install the device.

Table 3-1 Packing List

Item	Appearance	Quantity
Wireless Bridge	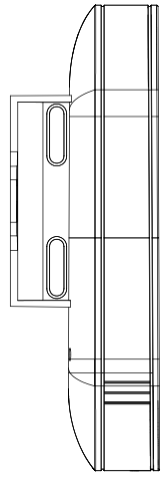	× 2
PoE Injector	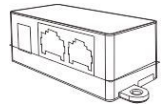	× 2
Power Adapter	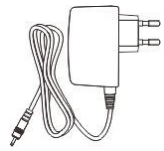	× 2
Cable Tie		× 4
Quick Start Guide	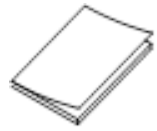	× 1
Regulatory Compliance and Safety Information	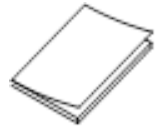	× 1

Note

The device image used here is only for example purpose. The actual device may vary with models.

Interface/Button

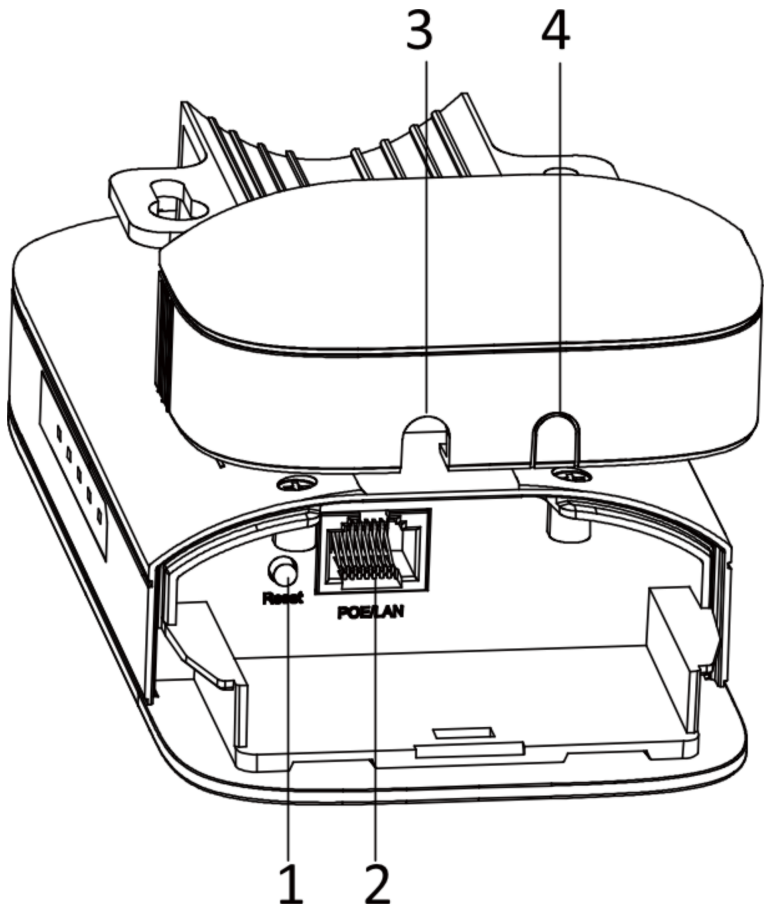

Figure 3-2 Device Interface/Button

Table 3-2 Device Interface/Button Description

No.	Interface/Button	Description
1	Reset	Long press for 4 seconds to restore to factory settings.
2	PoE/LAN	The 10/100 Mbps adaptive RJ45 port, also can be used as a PoE port.
3/4	Network Cable Slot	Reserved for easy placement of the network cables.

Indicator

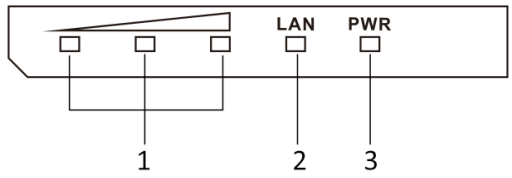

Figure 3-3 Device Indicator

Table 3-3 Device Indicator Description

No.	Indicator	Description	
1	Signal Strength Indicator	Solid on	The devices are matched. • Solid red, yellow, and green: The wireless signal is strong. • Solid red and yellow, unlit green: The wireless signal is normal. • Solid red, unlit yellow and green: The wireless signal is weak. Please adjust the position and direction of the device.
		Unlit	The devices are not matched.
2	LAN Indicator	Solid Green	The port is connected.
		Flashing Green	The port is transmitting data. The faster the indicator flashes, the greater the transmission rate is.
		Unlit	The port is disconnected or connection is abnormal.
3	Power Indicator	Solid Green	The device is powered on normally
		Unlit	No power supply connected or power supply is abnormal.

Application Scene

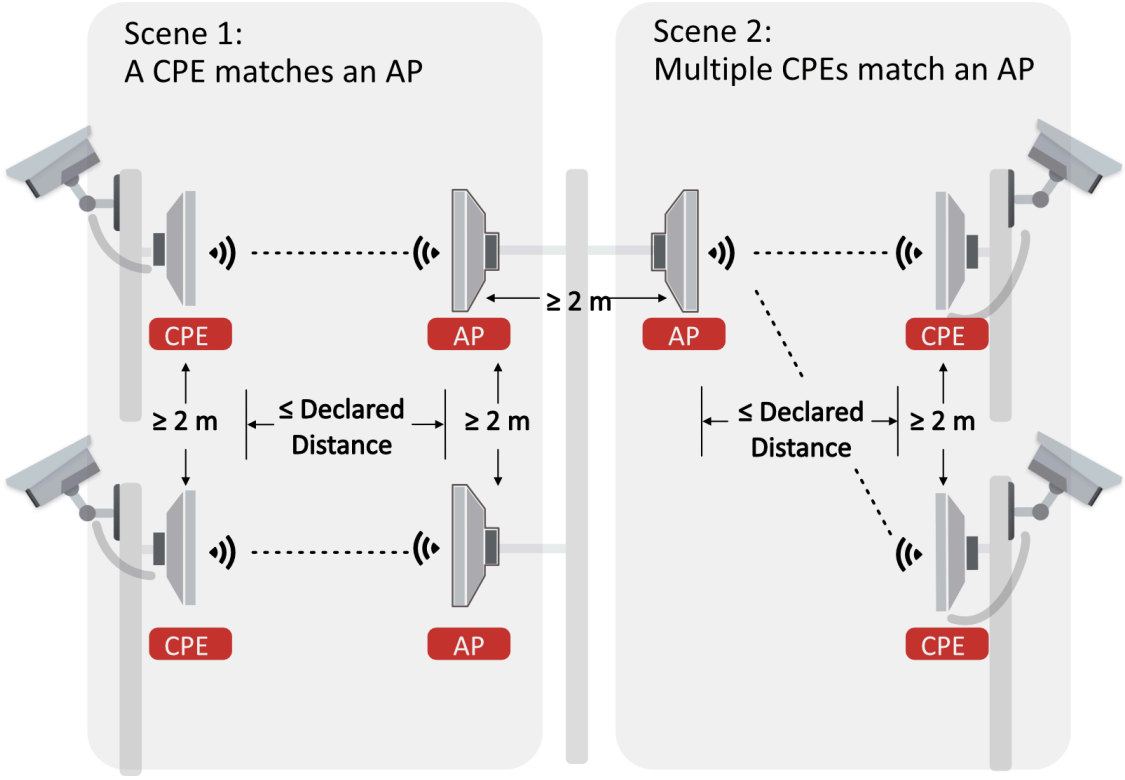

Figure 3-4 Application Scene

Preparation for Installation

To avoid device damage or personal injury caused by improper usage of the device, please follow the preparations below.

- Use the attached power adapter and PoE injector to power the device.
- The distance between AP and CPE should be less than 500 m to secure transmission rate.
- At least 2 m distance should be kept between two adjacent devices.
- The devices should be installed face to face and the max. angle of deviation is 30°.
- Install the device in the place where the maintenance personnel can operate easily.
- Make sure the device is installed vertically in forward direction, while not horizontally or in reverse direction.
- Make sure the water-proof cover is installed.
- Protect the power adapter and PoE injector from rain. It is suggested to put them into a waterproof case or keep them in a dry place.
- It is suggested to manage the gap between cover and device with fluid dispensing.
- Disconnect the power supply when you have the device serviced.
- The temperature of the cover area will be high when the device is working. In the circumstances, only personnel with relevant professional knowledge, such as installation and maintenance personnel, are allowed to operate the device.

Pole Installation

Mount the device on the pole with a diameter of 40 to 100 mm using the attached cable tie. Please read and follow the steps:

1. Thread the cable ties into the installation holes at the back of the device.

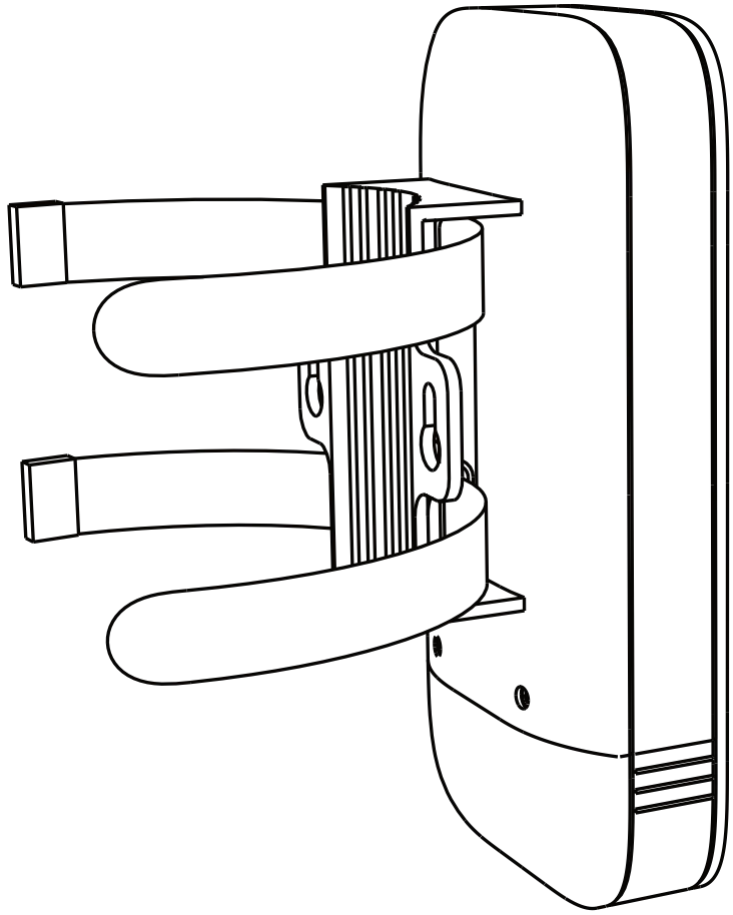

Figure 3-5 Thread Cable Ties

2. Fix and fasten the cable ties on the pole.

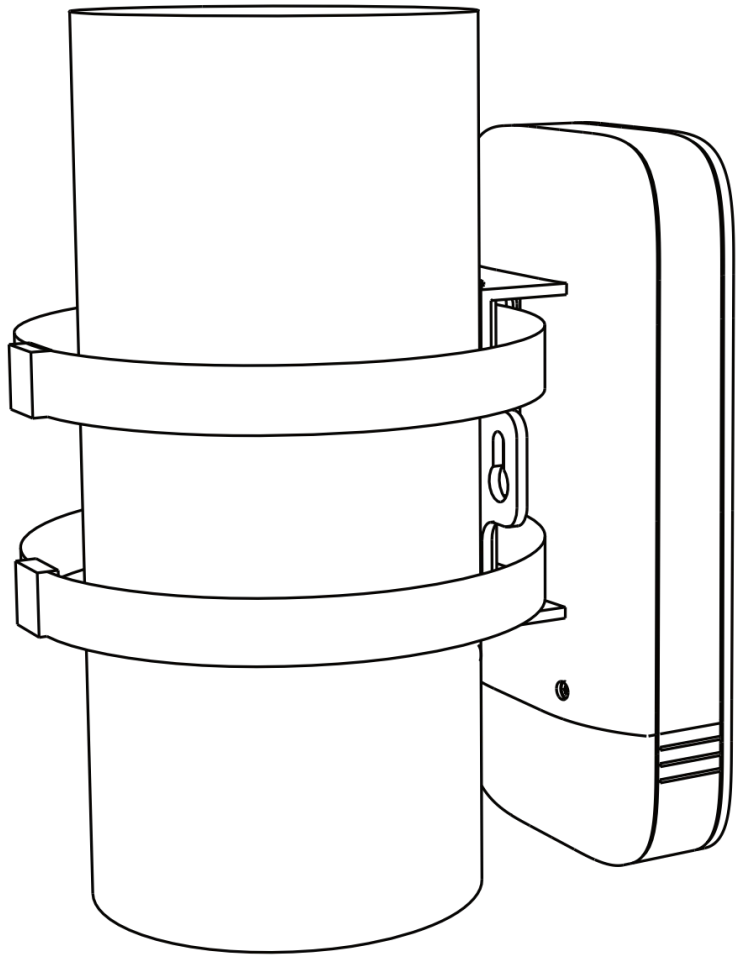

Figure 3-6 Fix Device

Note

Adjust the direction of the device manually to keep the device installed vertically.

Device Connection

Based on the actual situations, connect the device according to the following wiring steps.

Note

- Use the attached power adapter and PoE injector to power on the device.
- The power adapter and PoE injector must be connected to an earthed socket outlet.
- The devices in the package should be used in pair and cannot be used arbitrarily together with another incompatible device.

1. **AP connection:**

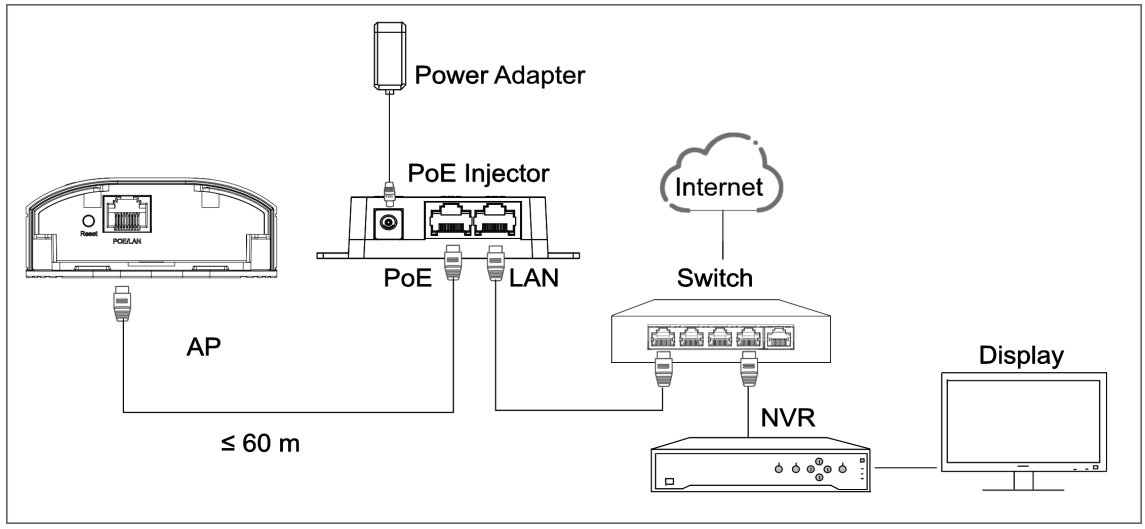

Figure 3-7 AP Connection

2. **CPE connection:**

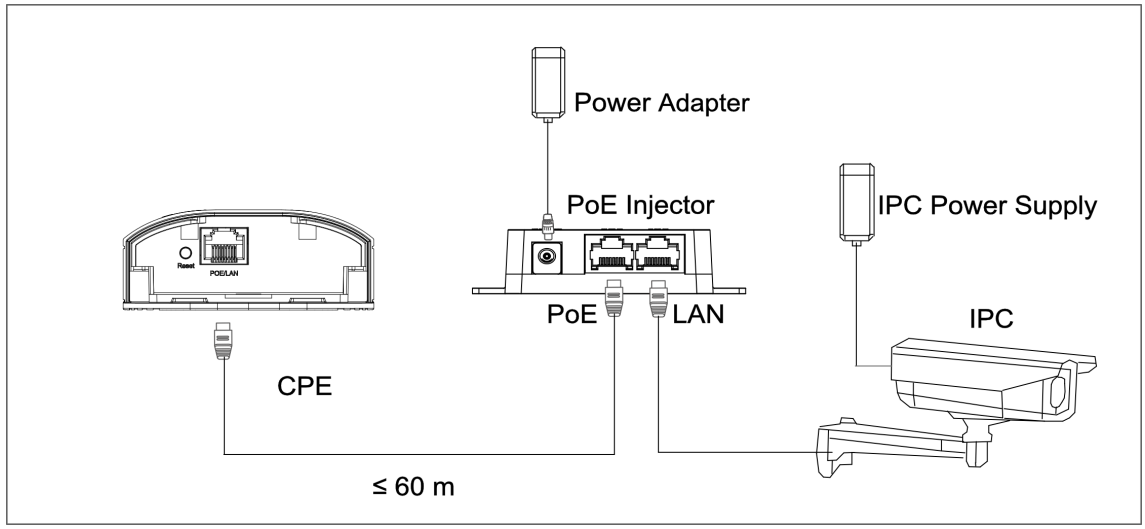

Figure 3-8 CPE Connection

3. After you finish the device connection, check device working status, network connection, and signal strength according to indicators.

3.1.2 DS-3WF500S-EI-2N

The 2.4 GHz wireless bridge (hereinafter referred to as *the device*) is used for wireless transmission within 500 m. It supports point-to-point transmission and can guarantee the multi-channel HD video transmission for outdoor video security.

Packing List

Please check if there is any damage of the package first. According to the packing list, make sure no item is lost. After checking all the items included, you can continue to install the device.

Table 3-4 Packing List

Item	Appearance	Quantity
Wireless Bridge	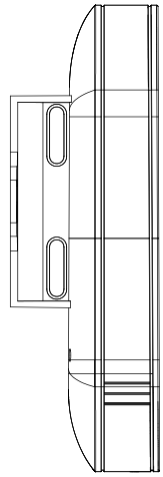	× 1
PoE Injector	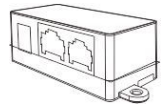	× 1
Power Adapter	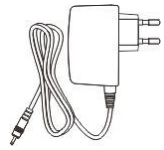	× 1
Cable Tie		× 2

Item	Appearance	Quantity
Quick Start Guide	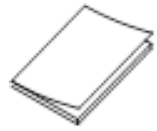	× 1
Regulatory Compliance and Safety Information	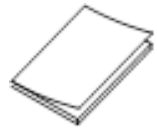	× 1

Note

The device image used here is only for example purpose. The actual device may vary with models.

Interface/Button

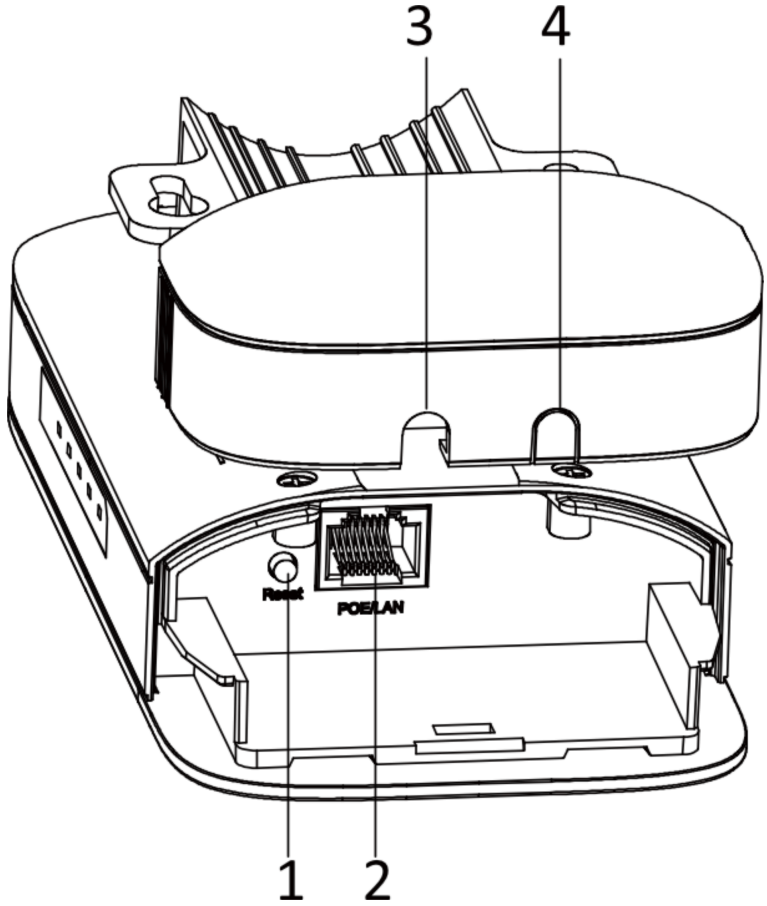

Figure 3-9 Device Interface/Button

Table 3-5 Device Interface/Button Description

No.	Interface/Button	Description
1	Reset	Long press for 4 seconds to restore to factory settings.
2	PoE/LAN	The 10/100 Mbps adaptive RJ45 port, also can be used as a PoE port.
3/4	Network Cable Slot	Reserved for easy placement of the network cables.

Indicator

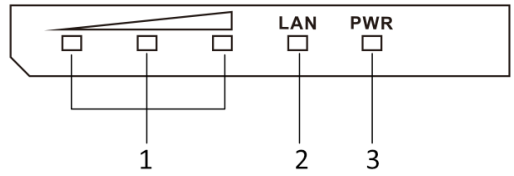

Figure 3-10 Device Indicator

Table 3-6 Device Indicator Description

No.	Indicator	Description	
1	Signal Strength Indicator	Solid on	The devices are matched. • Solid red, yellow, and green: The wireless signal is strong. • Solid red and yellow, unlit green: The wireless signal is normal. • Solid red, unlit yellow and green: The wireless signal is weak. Please adjust the position and direction of the device.
		Unlit	The devices are not matched.
2	LAN Indicator	Solid Green	The port is connected.
		Flashing Green	The port is transmitting data. The faster the indicator flashes, the greater the transmission rate is.

No.	Indicator	Description	
		Unlit	The port is disconnected or connection is abnormal.
3	Power Indicator	Solid Green	The device is powered on normally
		Unlit	No power supply connected or power supply is abnormal.

Application Scene

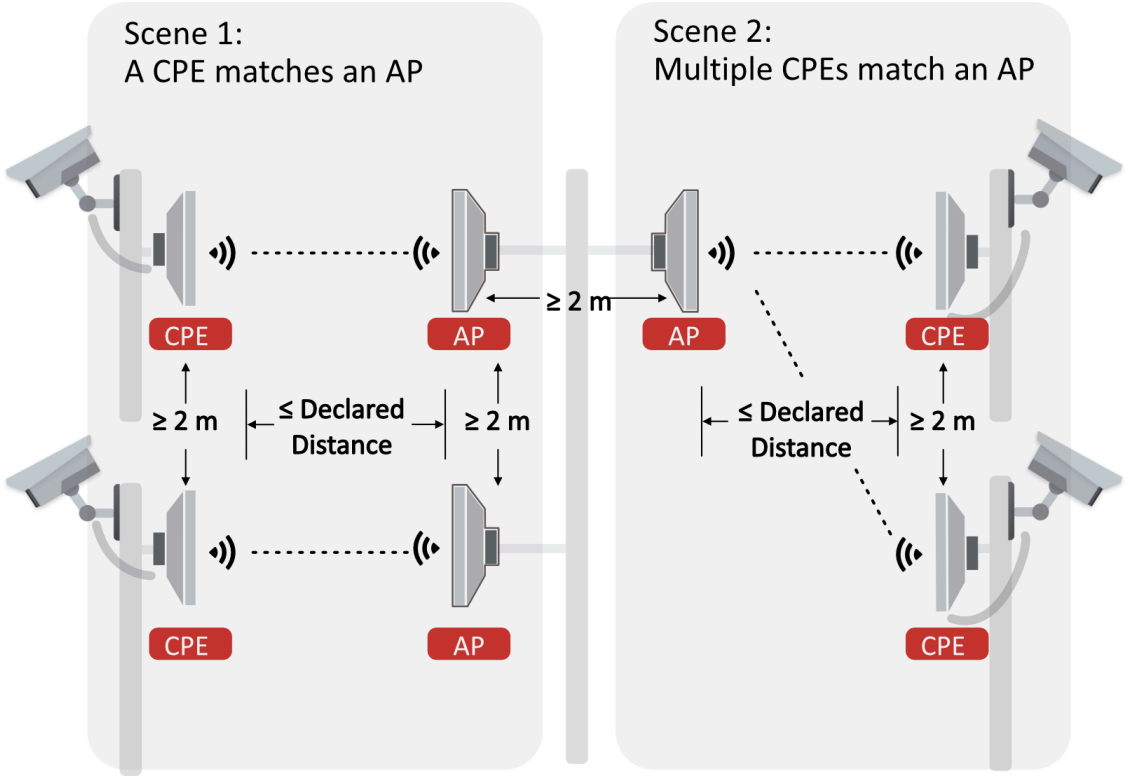

Figure 3-11 Application Scene

Preparation for Installation

To avoid device damage or personal injury caused by improper usage of the device, please follow the preparations below.

- Use the attached power adapter and PoE injector to power the device.
- The distance between AP and CPE should be less than 500 m to secure transmission rate.
- At least 2 m distance should be kept between two adjacent devices.
- The devices should be installed face to face and the max. angle of deviation is 30°.
- Install the device in the place where the maintenance personnel can operate easily.
- Make sure the device is installed vertically in forward direction, while not horizontally or in reverse direction.

- Make sure the water-proof cover is installed.
- Protect the power adapter and PoE injector from rain. It is suggested to put them into a waterproof case or keep them in a dry place.
- It is suggested to manage the gap between cover and device with fluid dispensing.
- Disconnect the power supply when you have the device serviced.
- The temperature of the cover area will be high when the device is working. In the circumstances, only personnel with relevant professional knowledge, such as installation and maintenance personnel, are allowed to operate the device.

Pole Installation

Mount the device on the pole with a diameter of 40 to 100 mm using the attached cable tie. Please read and follow the steps:

1. Thread the cable ties into the installation holes at the back of the device.

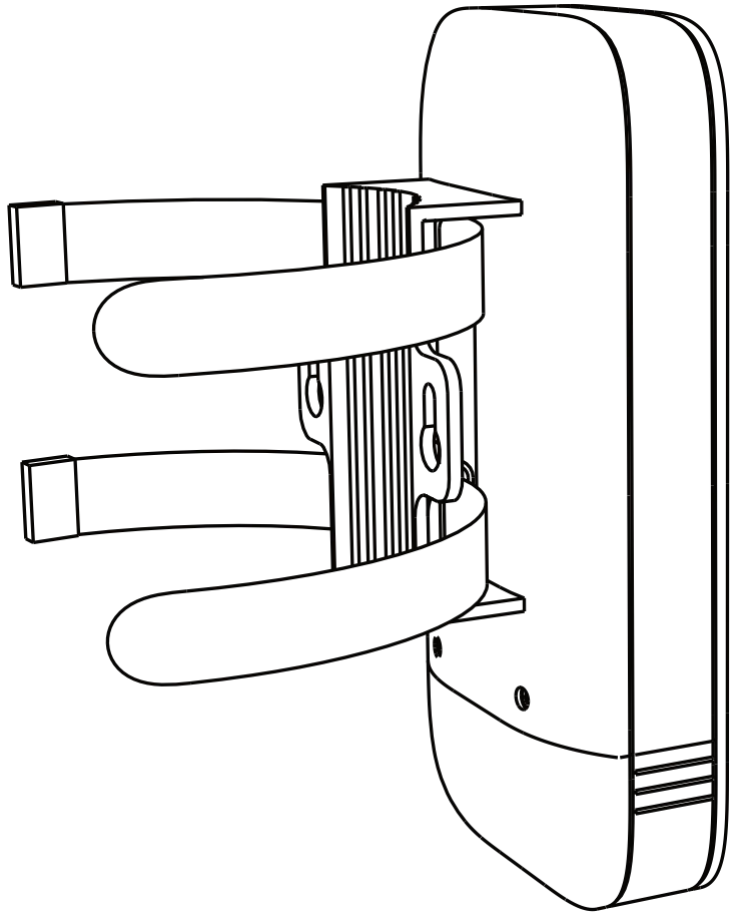

Figure 3-12 Thread Cable Ties

2. Fix and fasten the cable ties on the pole.

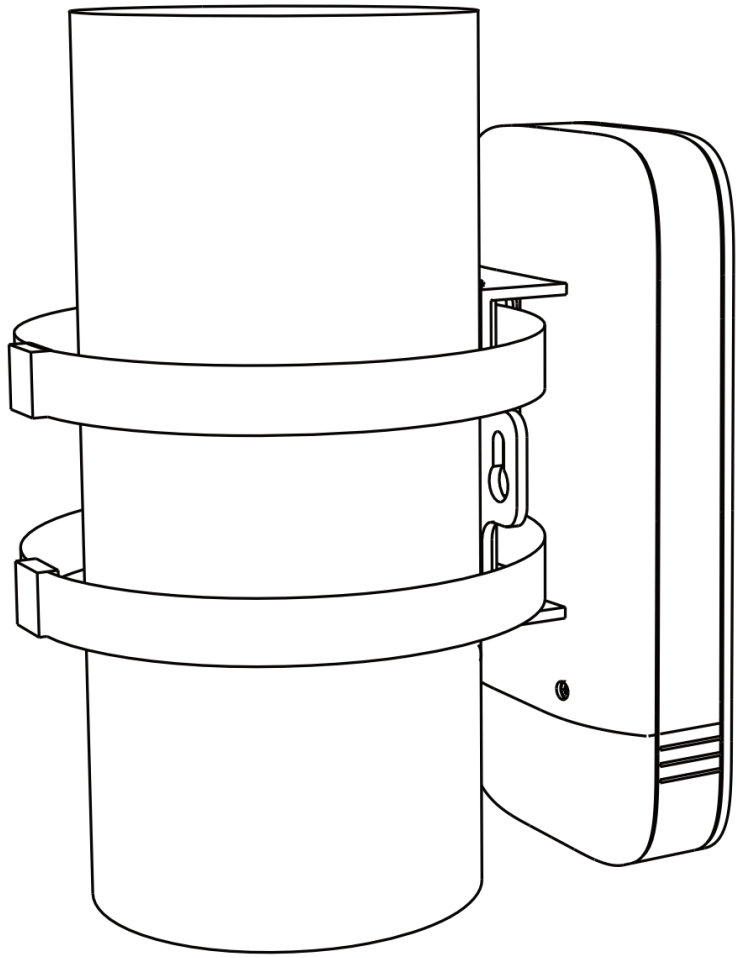

Figure 3-13 Fix Device

Note

Adjust the direction of the device manually to keep the device installed vertically.

CPE Connection

Note

- Use the attached power adapter and PoE injector to power on the device.
- The power adapter and PoE injector must be connected to an earthed socket outlet.

CPE connection:

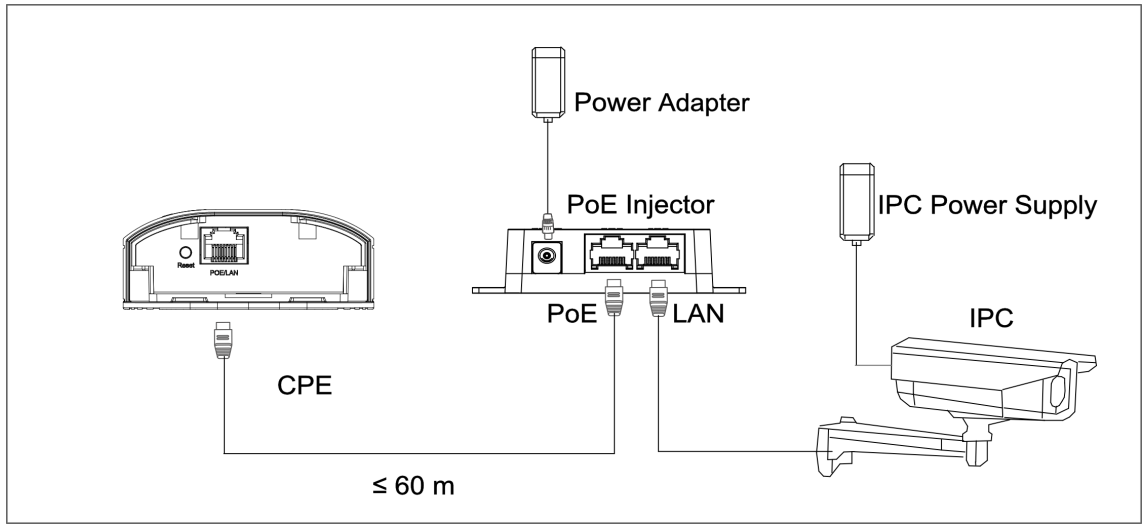

Figure 3-14 CPE Connection

After you finish the device connection, check device working status, network connection, and signal strength according to indicators.

3.2 2.4GHz 1km

3.2.1 DS-3WF0FA-2N/O

The 2.4 GHz wireless bridge (hereinafter referred to as *the device*) is used for wireless transmission within 1 km. It supports point-to-point transmission and can guarantee the multi-channel HD video transmission for outdoor video security.

Packing List

Please check if there is any damage of the package first. According to the packing list, make sure no item is lost. After checking all the items included, you can continue to install the device.

Table 3-7 Packing List

Item	Appearance	Quantity
Wireless Bridge	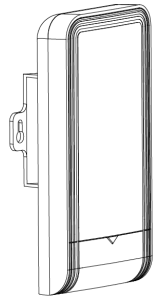	× 1
PoE Injector	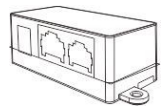	× 1
Power Adapter	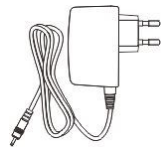	× 1
Cable Tie		× 4
Quick Start Guide	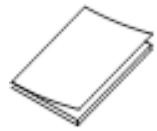	× 1
Regulatory Compliance and Safety Information	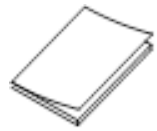	× 1

Note

The device image used here is only for example purpose. The actual device may vary with models.

Interface/Button

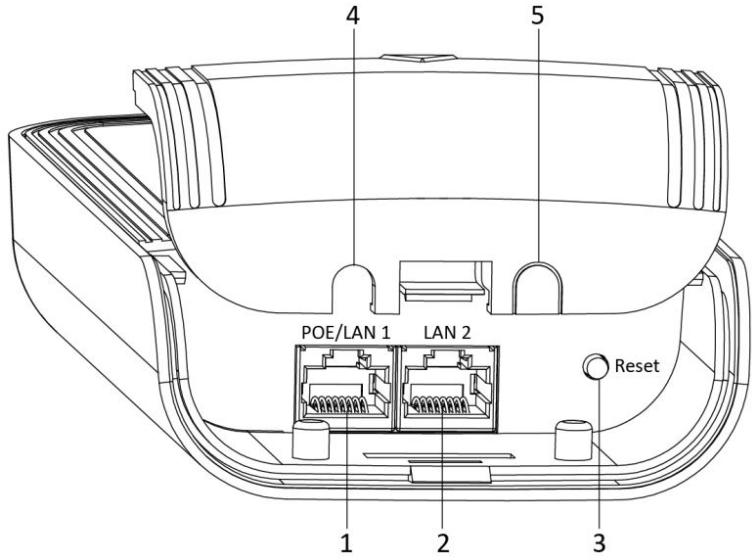

Figure 3-15 Device Interface/Button

Table 3-8 Device Interface/Button Description

No.	Interface/Button	Description
1	PoE/LAN 1	The 10/100 Mbps adaptive RJ45 port, also can be used as a PoE port.
2	LAN 2	The 10/100 Mbps adaptive RJ45 port.
3	Reset	Long press for 4 seconds to restore to factory settings.
4/5	Network Cable Slot	Reserved for easy placement of the network cables.

Indicator

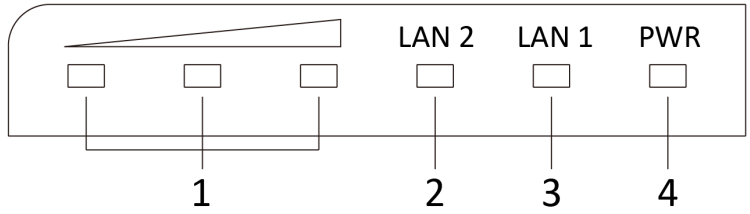

Figure 3-16 Device Indicator

Table 3-9 Device Indicator Description

No.	Indicator	Description	
1	Signal Strength Indicator	Solid on	The devices are matched. • Solid red, yellow, and green: The wireless signal is strong. • Solid red and yellow, unlit green: The wireless signal is normal. • Solid red, unlit yellow and green: The wireless signal is weak. Please adjust the position and direction of the device.
		Unlit	The devices are not matched.
2/3	LAN 2/LAN Indicator	Solid Green	The port is connected.
		Flashing Green	The port is transmitting data. The faster the indicator flashes, the greater the transmission rate is.
		Unlit	The port is disconnected or connection is abnormal.
4	Power Indicator	Solid Green	The device is powered on normally
		Unlit	No power supply connected or power supply is abnormal.

Application Scene

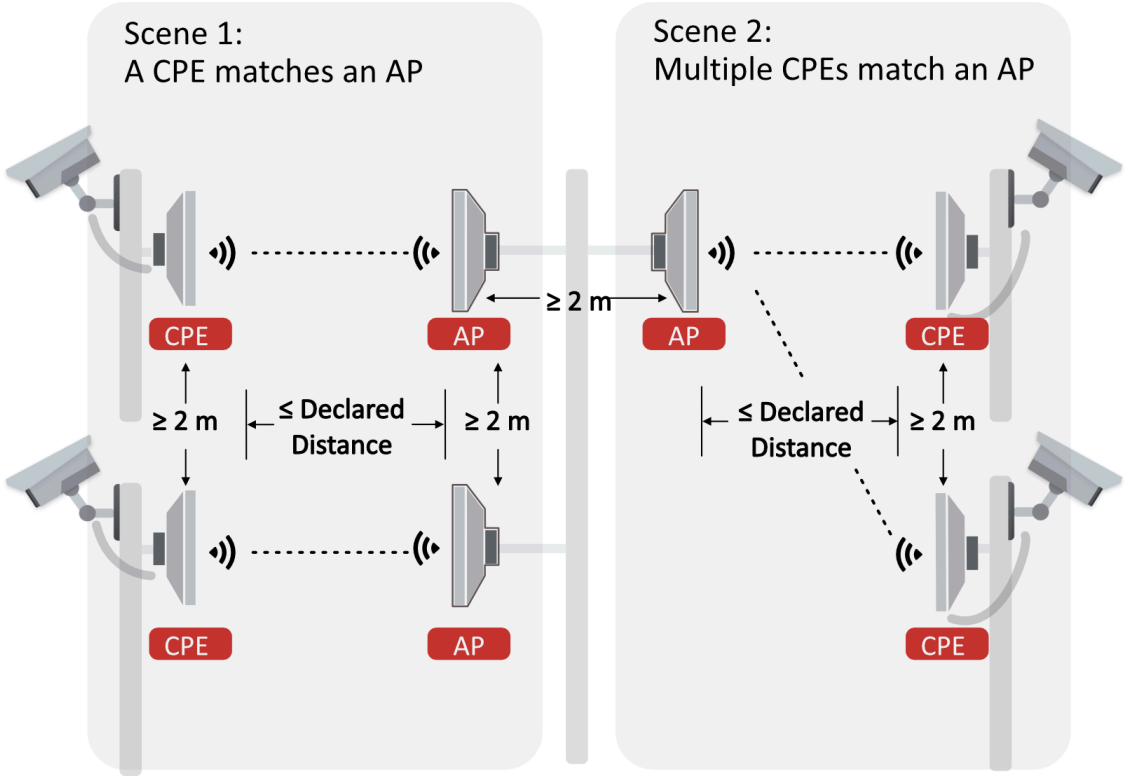

Figure 3-17 Application Scene

Preparation for Installation

To avoid device damage or personal injury caused by improper usage of the device, please follow the preparations below.

- Use the attached power adapter and PoE injector to power the device.
- The distance between AP and CPE should be less than 1 km to secure transmission rate.
- At least 2 m distance should be kept between two adjacent devices.
- The devices should be installed face to face and the max. angle of deviation is 30°.
- Install the device in the place where the maintenance personnel can operate easily.
- Make sure the device is installed vertically in forward direction, while not horizontally or in reverse direction.
- Make sure the water-proof cover is installed.
- Protect the power adapter and PoE injector from rain. It is suggested to put them into a waterproof case or keep them in a dry place.
- It is suggested to manage the gap between cover and device with fluid dispensing.
- Disconnect the power supply when you have the device serviced.
- The temperature of the cover area will be high when the device is working. In the circumstances, only personnel with relevant professional knowledge, such as installation and maintenance personnel, are allowed to operate the device.

Pole Installation

Mount the device on the pole with a diameter of 40 to 100 mm using the attached cable tie. Please read and follow the steps:

1. Thread the cable ties into the installation holes at the back of the device.

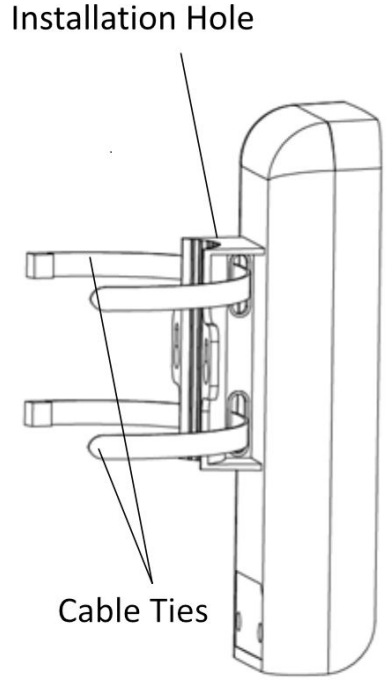

Figure 3-18 Thread Cable Ties

2. Fix and fasten the cable ties on the pole.

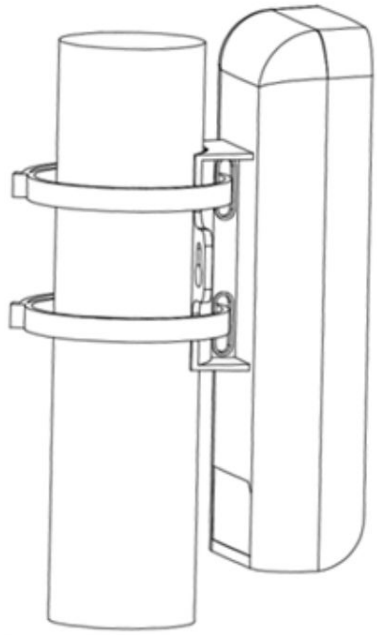

Figure 3-19 Fix Device

Note

Adjust the direction of the device manually to keep the device installed vertically.

Device Connection

Based on the actual situations, connect the device according to the following wiring steps.

Note

- Use the attached the power adapter and PoE injector to power on the device.
- The the PoE injector must be connected to an earthed socket outlet.

1. **AP connection:** Power on the AP device by the PoE injector.

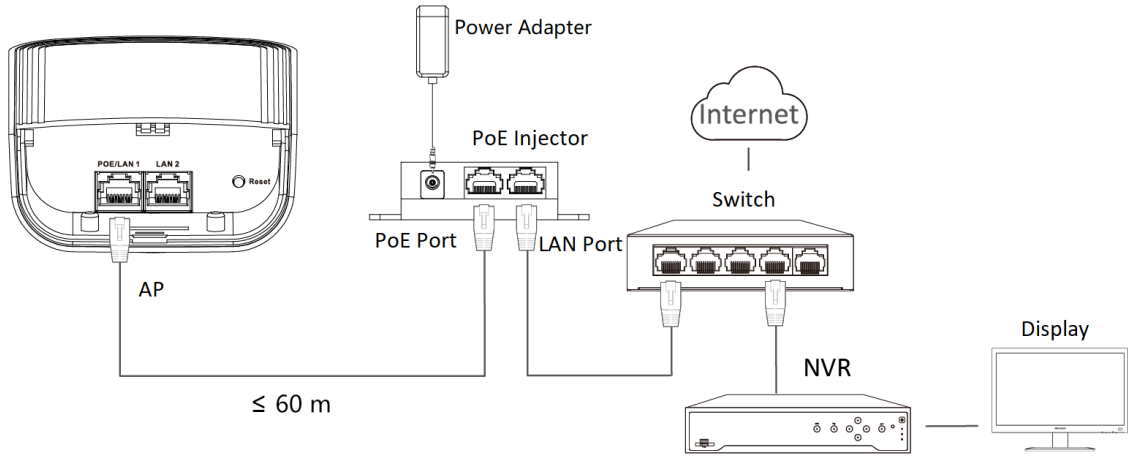

Figure 3-20 AP Connection

2. **CPE connection:** CPE device can supply power to IPC.

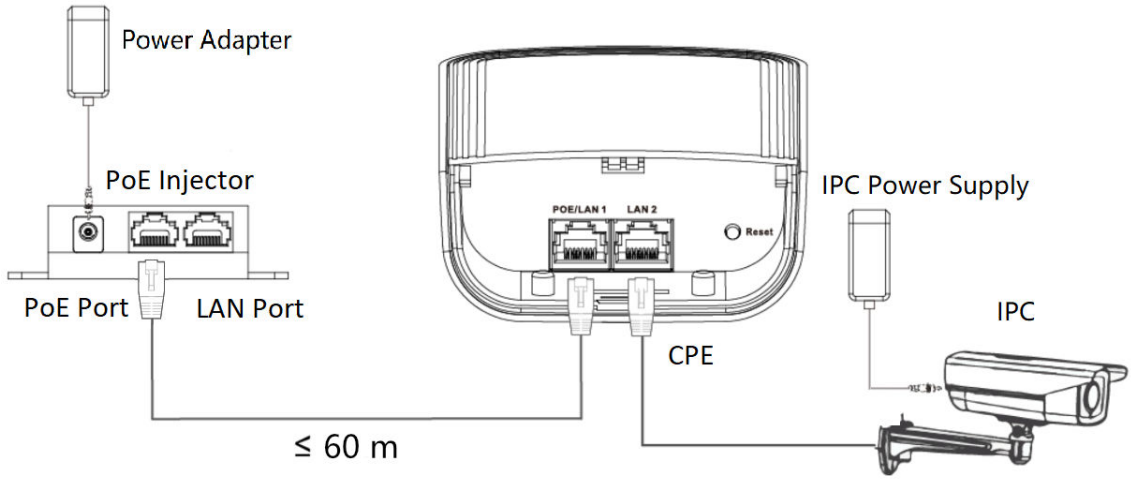

Figure 3-21 CPE Connection

3. After you finish the device connection, check device working status, network connection, and signal strength according to indicators.

3.2.2 DS-3WF0FC-2N/O

The 2.4 GHz wireless bridge (hereinafter referred to as *the device*) is used for wireless transmission within 1 km. It supports point-to-point transmission and can guarantee the multi-channel HD video transmission for outdoor video security.

Packing List

Please check if there is any damage of the package first. According to the packing list, make sure no item is lost. After checking all the items included, you can continue to install the device.

Table 3-10 Packing List

Item	Appearance	Quantity
Wireless Bridge	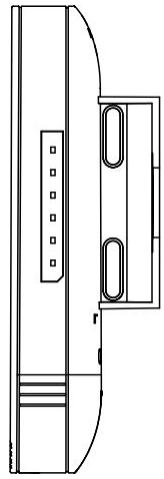	× 1
PoE Injector	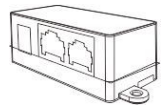	× 1
Power Adapter	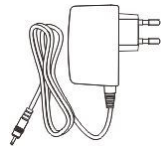	× 1
Cable Tie		× 2

Item	Appearance	Quantity
Quick Start Guide	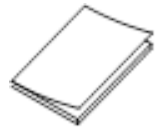	× 1
Regulatory Compliance and Safety Information	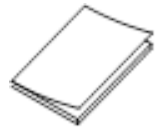	× 1

Note

The device image used here is only for example purpose. The actual device may vary with models.

Interface/Button

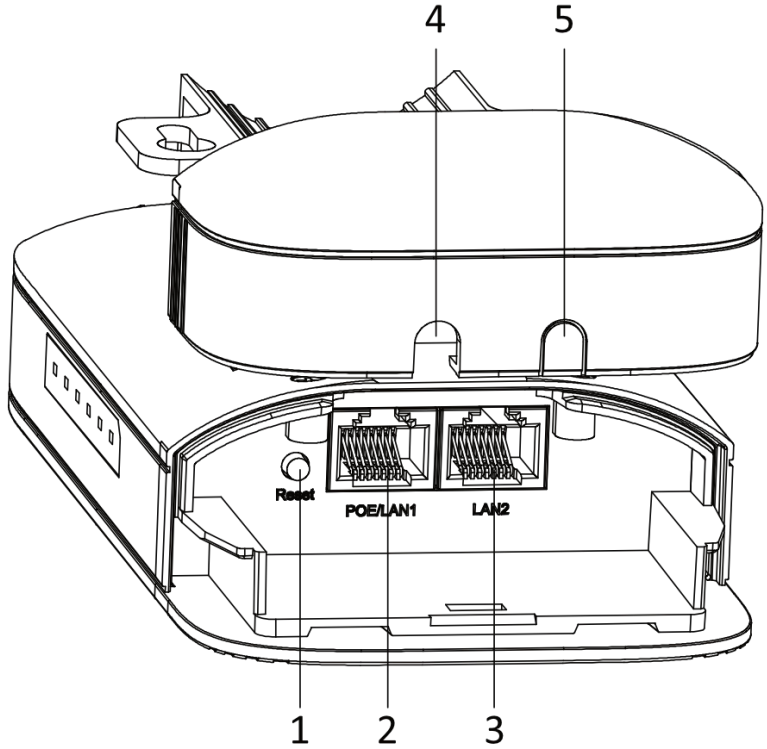

Figure 3-22 Device Interface/Button

Table 3-11 Device Interface/Button Description

No.	Interface/Button	Description
1	Reset	Long press for 4 seconds to restore to factory settings.
2	PoE IN/LAN 1	The 10/100 Mbps adaptive RJ45 port, also can be used as a PoE port.
3	LAN 2	The 10/100 Mbps adaptive RJ45 port.
4/5	Network Cable Slot	Reserved for easy placement of the network cables.

Indicator

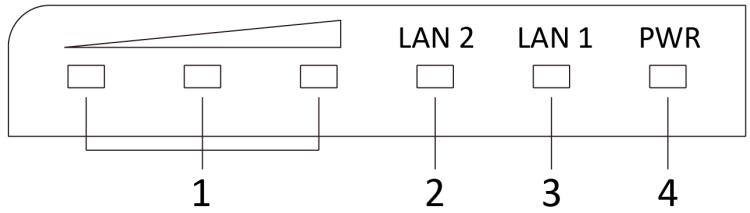

Figure 3-23 Device Indicator

Table 3-12 Device Indicator Description

No.	Indicator	Description	
1	Signal Strength Indicator	Solid on	The devices are matched. • Solid red, yellow, and green: The wireless signal is strong. • Solid red and yellow, unlit green: The wireless signal is normal. • Solid red, unlit yellow and green: The wireless signal is weak. Please adjust the position and direction of the device.
		Unlit	The devices are not matched.
2/3	LAN 2/LAN Indicator	Solid Green	The port is connected.
		Flashing Green	The port is transmitting data. The faster the indicator flashes, the greater the transmission rate is.
		Unlit	The port is disconnected or connection is abnormal.

No.	Indicator	Description	
4	Power Indicator	Solid Green	The device is powered on normally
		Unlit	No power supply connected or power supply is abnormal.

Application Scene

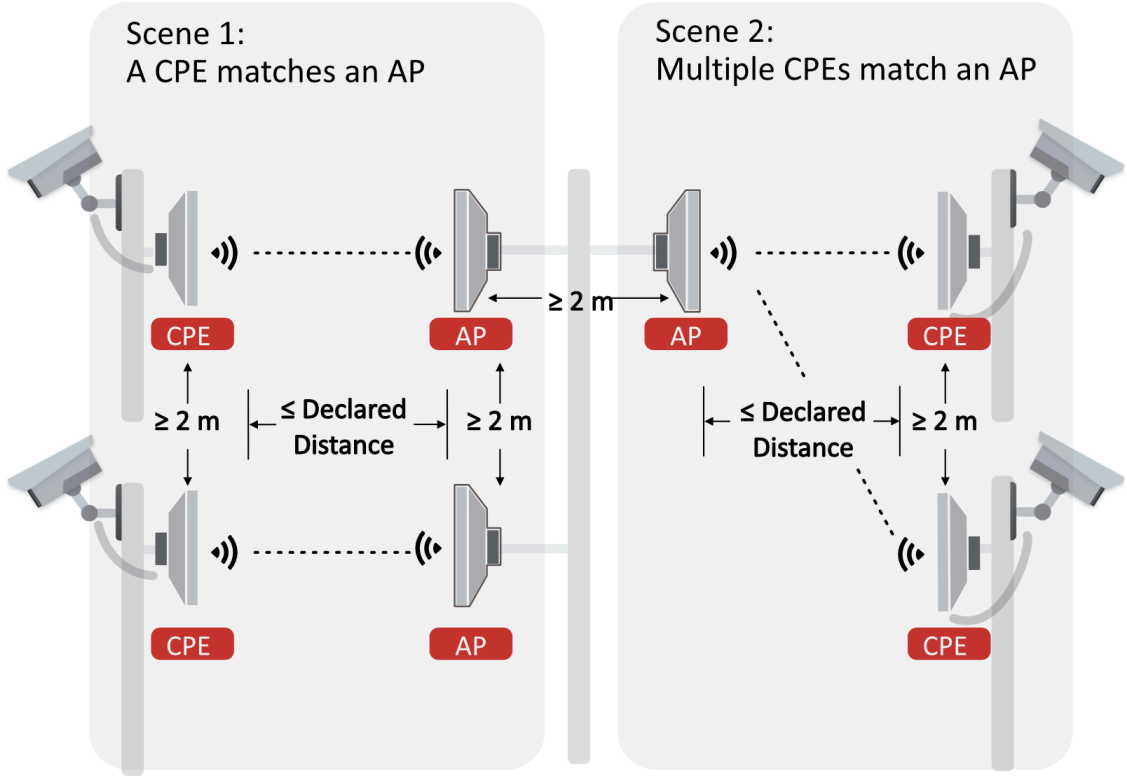

Figure 3-24 Application Scene

Preparation for Installation

To avoid device damage or personal injury caused by improper usage of the device, please follow the preparations below.

- Use the attached power adapter and PoE injector to power the device.
- The distance between AP and CPE should be less than 1 km to secure transmission rate.
- At least 2 m distance should be kept between two adjacent devices.
- The devices should be installed face to face and the max. angle of deviation is 30°.
- Install the device in the place where the maintenance personnel can operate easily.
- Make sure the device is installed vertically in forward direction, while not horizontally or in reverse direction.
- Make sure the water-proof cover is installed.

- Protect the power adapter and PoE injector from rain. It is suggested to put them into a waterproof case or keep them in a dry place.
- It is suggested to manage the gap between cover and device with fluid dispensing.
- Disconnect the power supply when you have the device serviced.
- The temperature of the cover area will be high when the device is working. In the circumstances, only personnel with relevant professional knowledge, such as installation and maintenance personnel, are allowed to operate the device.

Pole Installation

Mount the device on the pole with a diameter of 40 to 100 mm using the attached cable tie. Please read and follow the steps:

1. Thread the cable ties into the installation holes at the back of the device.

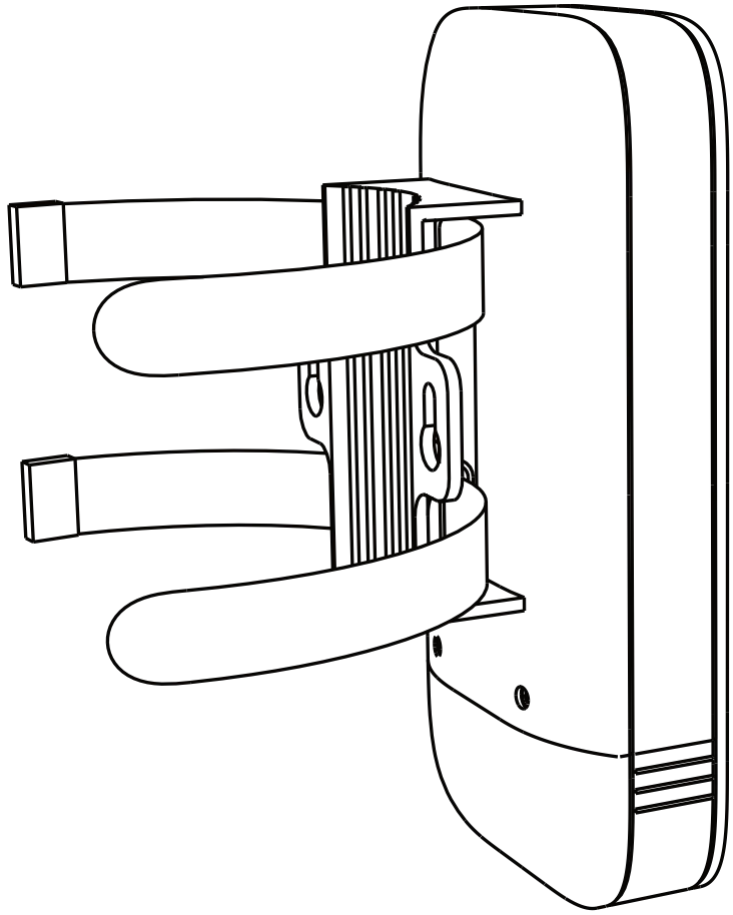

Figure 3-25 Thread Cable Ties

2. Fix and fasten the cable ties on the pole.

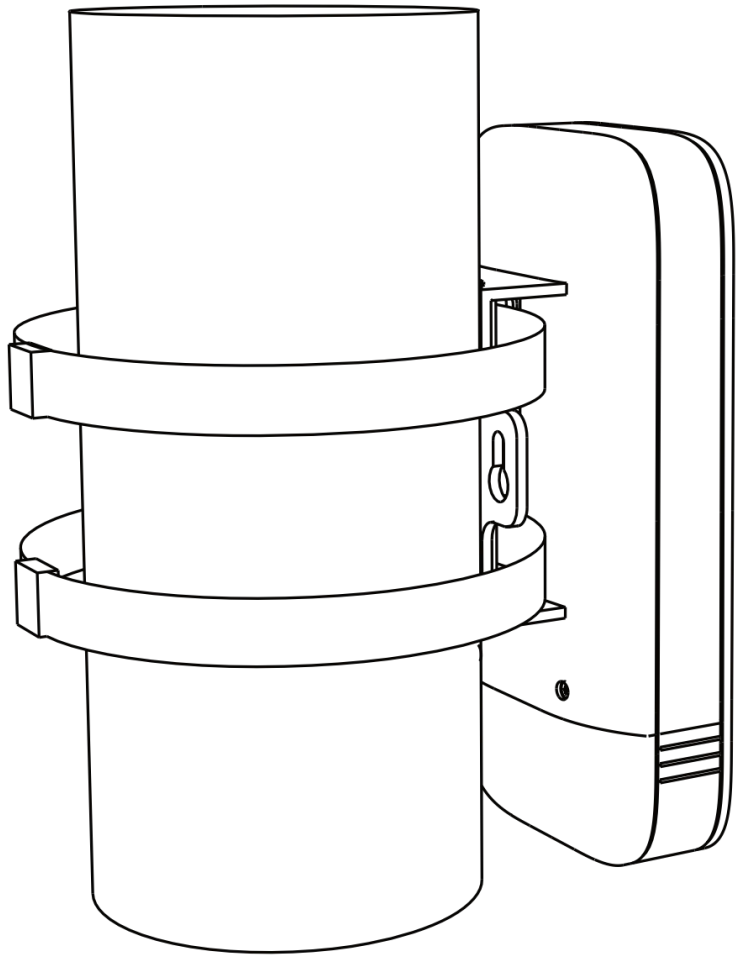

Figure 3-26 Fix Device

Note

Adjust the direction of the device manually to keep the device installed vertically.

Device Connection

Based on the actual situations, connect the device according to the following wiring steps.

Note

- Use the attached the power adapter and PoE injector to power on the device.
- The the PoE injector must be connected to an earthed socket outlet.

1. **AP connection:**

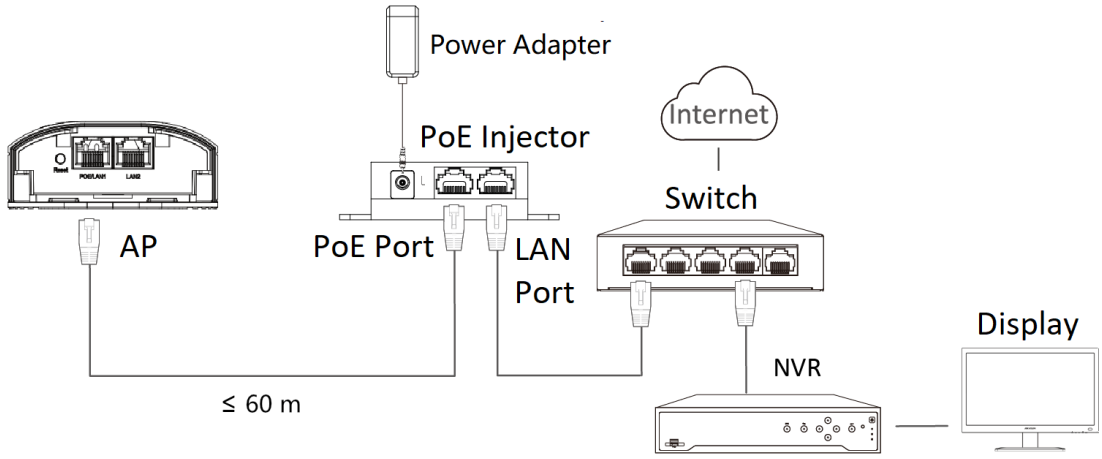

Figure 3-27 AP Connection

2. **CPE connection:**

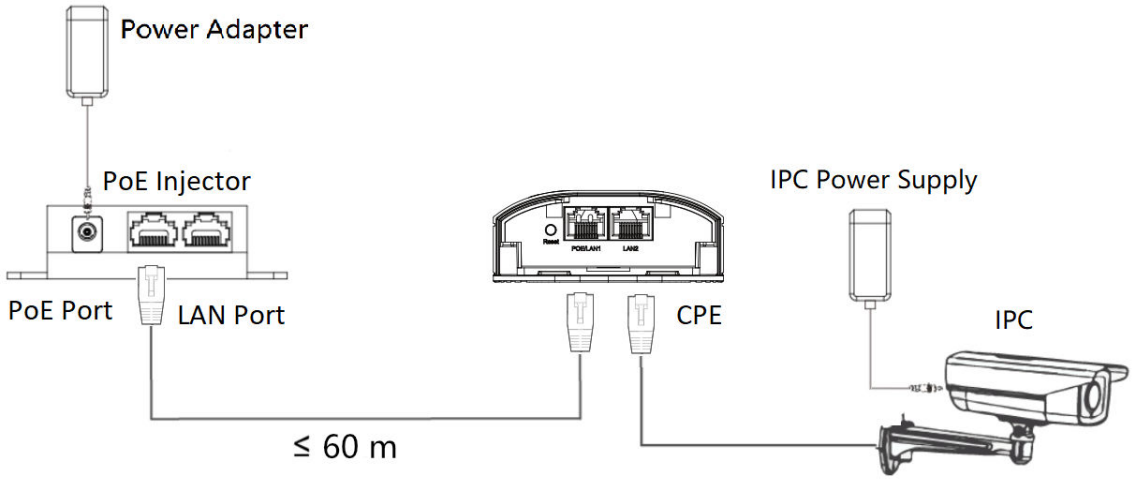

Figure 3-28 CPE Connection

3. After you finish the device connection, check device working status, network connection, and signal strength according to indicators.

3.2.3 DS-3WF1000-EI-2N

The 2.4 GHz wireless bridge (hereinafter referred to as *the device*) is used for wireless transmission within 1 km. It supports point-to-point transmission and can guarantee the multi-channel HD video transmission for outdoor video security.

Packing List

Please check if there is any damage of the package first. According to the packing list, make sure no item is lost. After checking all the items included, you can continue to install the device.

Table 3-13 Packing List

Item	Appearance	Quantity
Wireless Bridge	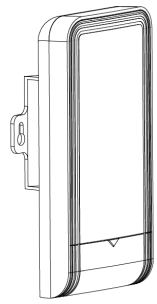	× 2
PoE Injector	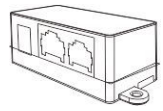	× 2
Power Adapter	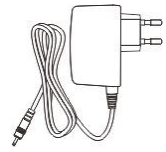	× 2
Cable Tie		× 4
Quick Start Guide	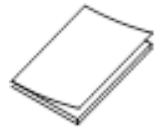	× 1
Regulatory Compliance and Safety Information	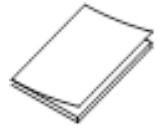	× 1

Note

The device image used here is only for example purpose. The actual device may vary with models.

Interface/Button

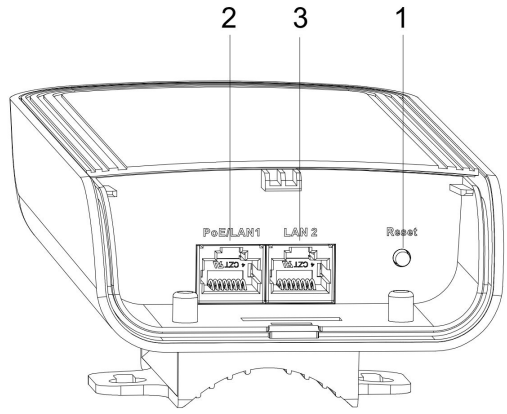

Figure 3-29 Device Interface/Button

Table 3-14 Device Interface/Button Description

No.	Interface/Button	Description
1	Reset	Long press for 4 seconds to restore to factory settings.
2	PoE IN/LAN 1	The 10/100 Mbps adaptive RJ45 port, also can be used as a PoE port.
3	LAN 2	The 10/100 Mbps adaptive RJ45 port.

Indicator

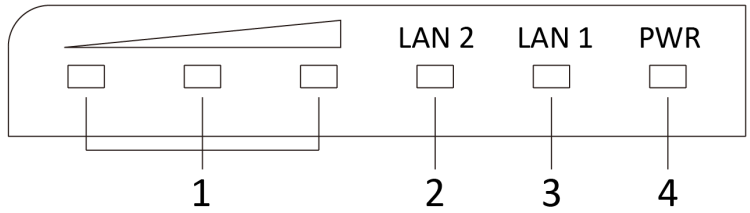

Figure 3-30 Device Indicator

Table 3-15 Device Indicator Description

No.	Indicator	Description	
1	Signal Strength Indicator	Solid on	The devices are matched. • Solid red, yellow, and green: The wireless signal is strong. • Solid red and yellow, unlit green: The wireless signal is normal. • Solid red, unlit yellow and green: The wireless signal is weak. Please adjust the position and direction of the device.
		Unlit	The devices are not matched.
2/3	LAN 2/LAN Indicator	Solid Green	The port is connected.
		Flashing Green	The port is transmitting data. The faster the indicator flashes, the greater the transmission rate is.
		Unlit	The port is disconnected or connection is abnormal.
4	Power Indicator	Solid Green	The device is powered on normally
		Unlit	No power supply connected or power supply is abnormal.

Application Scene

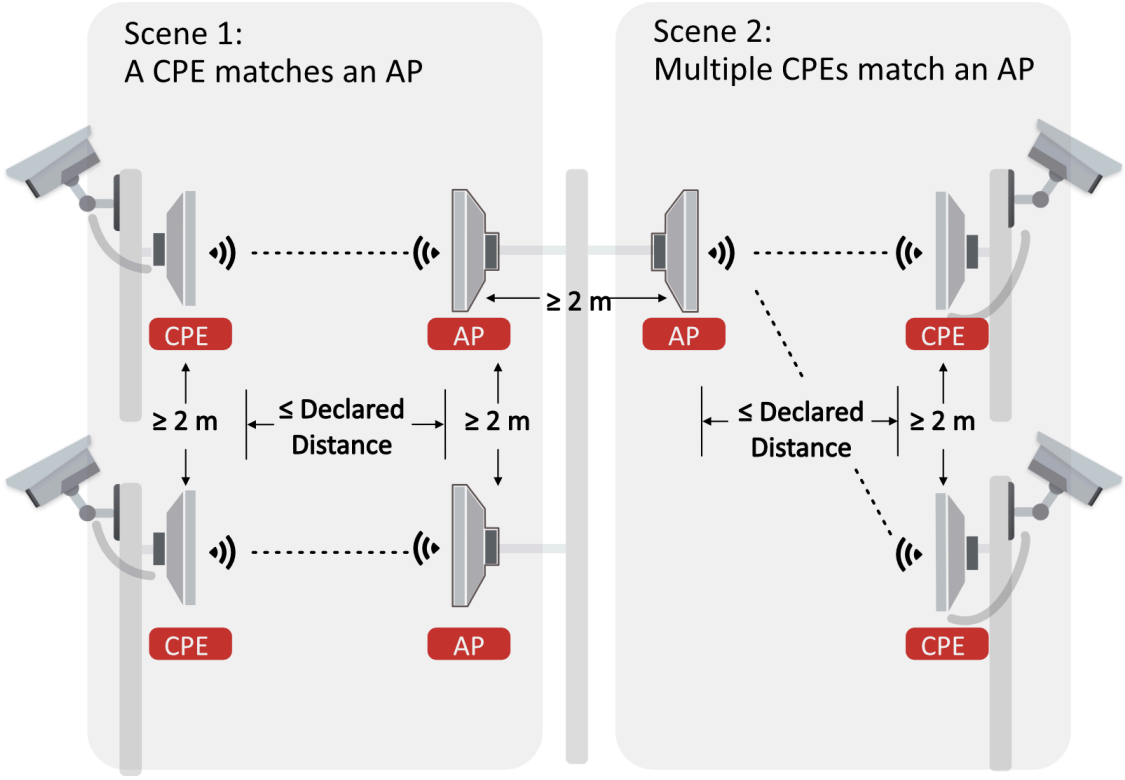

Figure 3-31 Application Scene

Preparation for Installation

To avoid device damage or personal injury caused by improper usage of the device, please follow the preparations below.

- Use the attached power adapter and PoE injector to power the device.
- The distance between AP and CPE should be less than 1 km to secure transmission rate.
- At least 2 m distance should be kept between two adjacent devices.
- The devices should be installed face to face and the max. angle of deviation is 30°.
- Install the device in the place where the maintenance personnel can operate easily.
- Make sure the device is installed vertically in forward direction, while not horizontally or in reverse direction.
- Make sure the water-proof cover is installed.
- Protect the power adapter and PoE injector from rain. It is suggested to put them into a waterproof case or keep them in a dry place.
- It is suggested to manage the gap between cover and device with fluid dispensing.
- Disconnect the power supply when you have the device serviced.
- The temperature of the cover area will be high when the device is working. In the circumstances, only personnel with relevant professional knowledge, such as installation and maintenance personnel, are allowed to operate the device.

Pole Installation

Mount the device on the pole with a diameter of 40 to 100 mm using the attached cable tie. Please read and follow the steps:

1. Thread the cable ties into the installation holes at the back of the device.

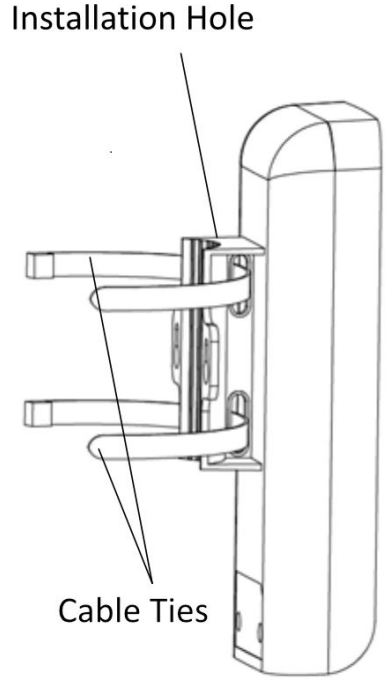

Figure 3-32 Thread Cable Ties

2. Fix and fasten the cable ties on the pole.

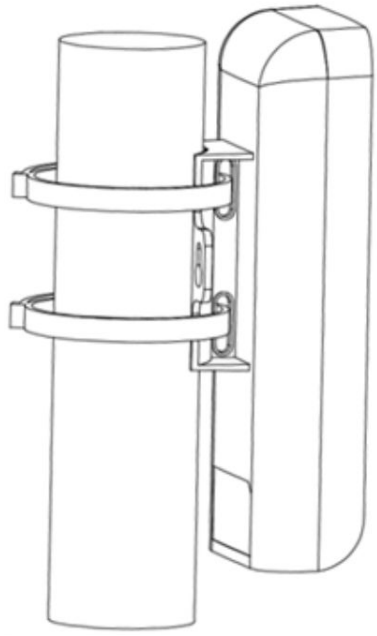

Figure 3-33 Fix Device

Note

Adjust the direction of the device manually to keep the device installed vertically.

Device Connection

Based on the actual situations, connect the device according to the following wiring steps.

Note

- Use the attached power adapter and PoE injector to power on the device.
- The power adapter and PoE injector must be connected to an earthed socket outlet.
- The devices in the package should be used in pair and cannot be used arbitrarily together with another incompatible device.

1. **AP connection:**

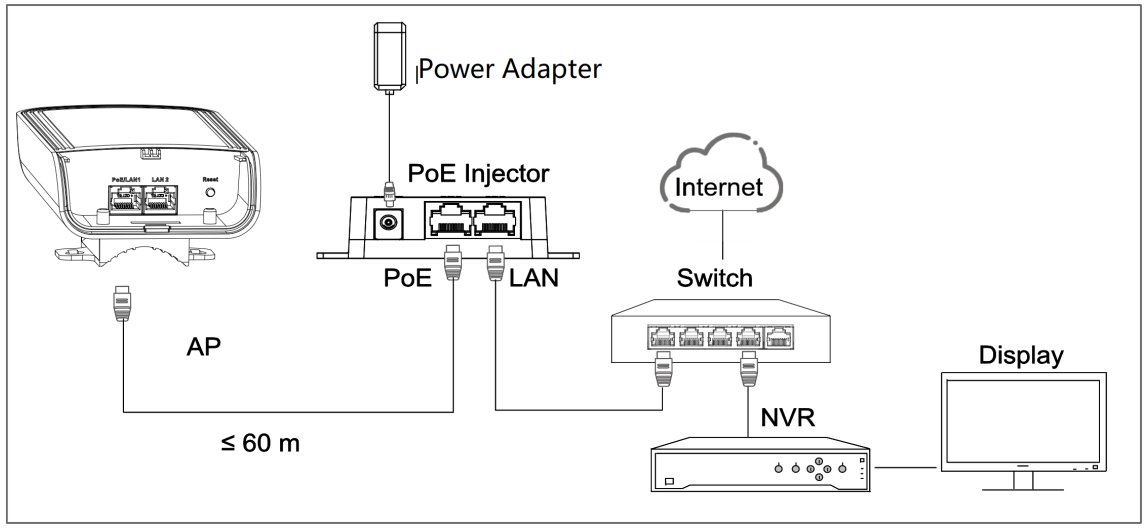

Figure 3-34 AP Connection

2. **CPE connection:**

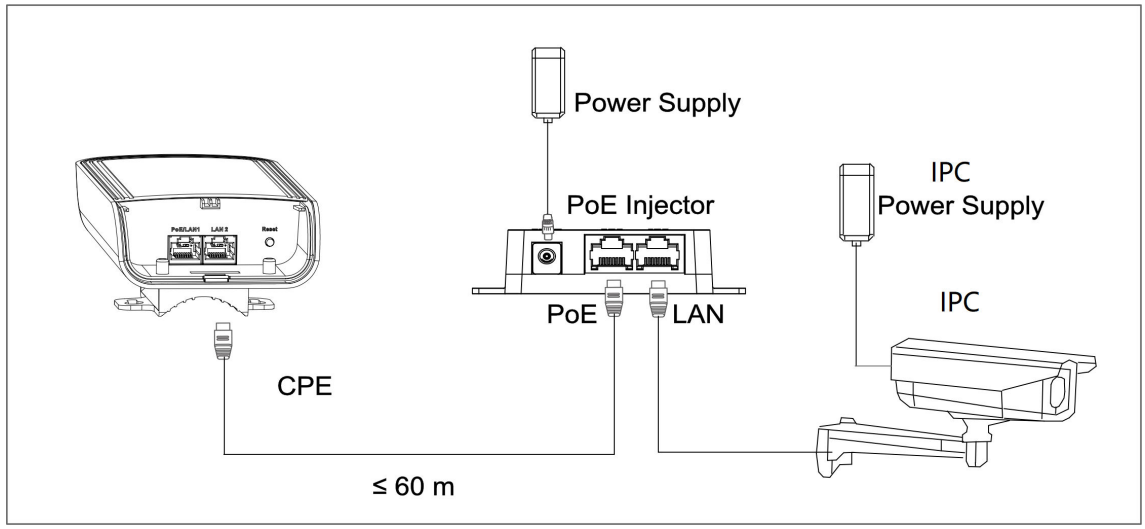

Figure 3-35 CPE Connection

3. After you finish the device connection, check device working status, network connection, and signal strength according to indicators.

3.2.4 DS-3WF1000S-EI-2N

The 2.4 GHz wireless bridge (hereinafter referred to as *the device*) is used for wireless transmission within 1 km. It supports point-to-point transmission and can guarantee the multi-channel HD video transmission for outdoor video security.

Packing List

Please check if there is any damage of the package first. According to the packing list, make sure no item is lost. After checking all the items included, you can continue to install the device.

Table 3-16 Packing List

Item	Appearance	Quantity
Wireless Bridge	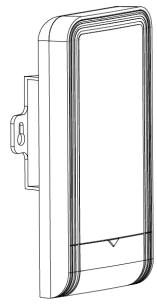	× 1
PoE Injector	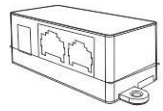	× 1
Power Adapter	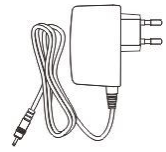	× 1
Cable Tie		× 2
Quick Start Guide	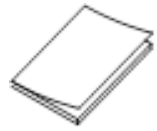	× 1
Regulatory Compliance and Safety Information	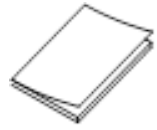	× 1

Note

The device image used here is only for example purpose. The actual device may vary with models.

Interface/Button

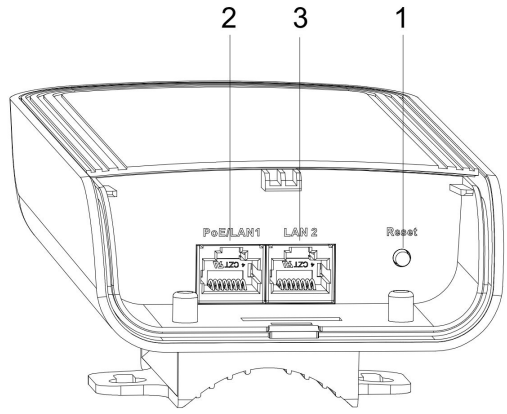

Figure 3-36 Device Interface/Button

Table 3-17 Device Interface/Button Description

No.	Interface/Button	Description
1	Reset	Long press for 4 seconds to restore to factory settings.
2	PoE IN/LAN 1	The 10/100 Mbps adaptive RJ45 port, also can be used as a PoE port.
3	LAN 2	The 10/100 Mbps adaptive RJ45 port.

Indicator

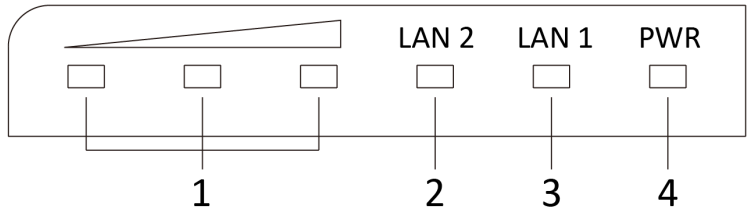

Figure 3-37 Device Indicator

Table 3-18 Device Indicator Description

No.	Indicator	Description	
1	Signal Strength Indicator	Solid on	The devices are matched. • Solid red, yellow, and green: The wireless signal is strong. • Solid red and yellow, unlit green: The wireless signal is normal. • Solid red, unlit yellow and green: The wireless signal is weak. Please adjust the position and direction of the device.
		Unlit	The devices are not matched.
2/3	LAN 2/LAN Indicator	Solid Green	The port is connected.
		Flashing Green	The port is transmitting data. The faster the indicator flashes, the greater the transmission rate is.
		Unlit	The port is disconnected or connection is abnormal.
4	Power Indicator	Solid Green	The device is powered on normally
		Unlit	No power supply connected or power supply is abnormal.

Application Scene

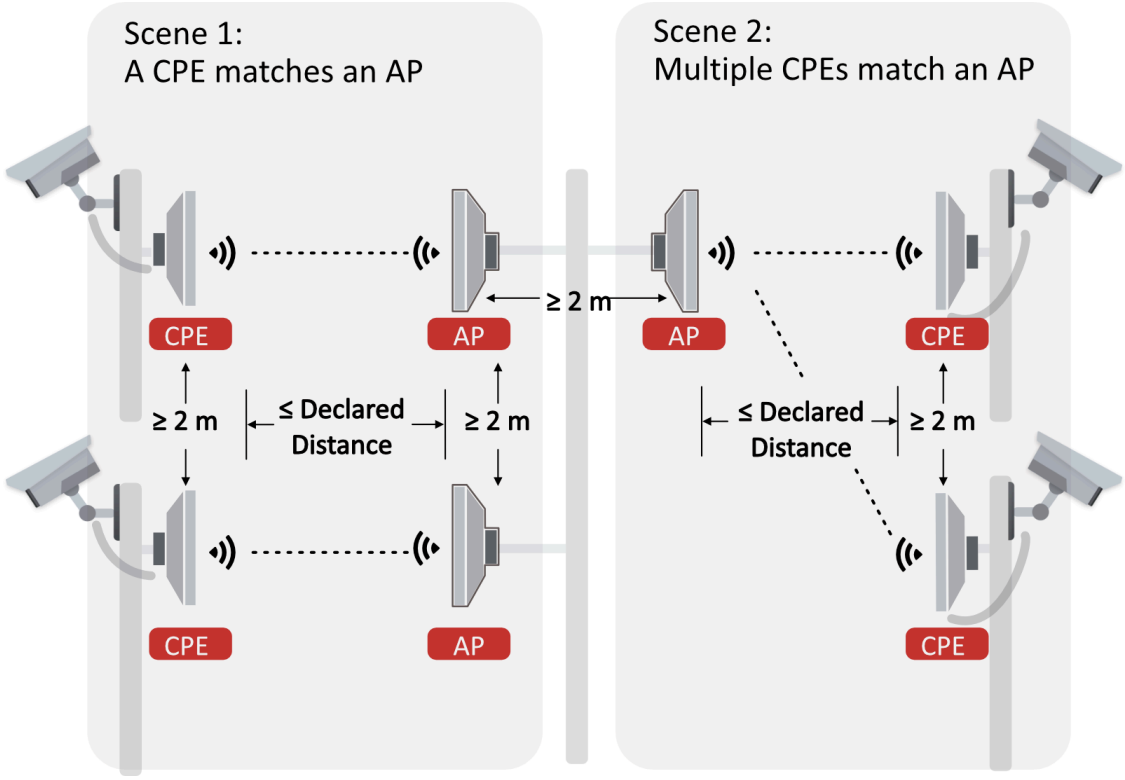

Figure 3-38 Application Scene

Preparation for Installation

To avoid device damage or personal injury caused by improper usage of the device, please follow the preparations below.

- Use the attached power adapter and PoE injector to power the device.
- The distance between AP and CPE should be less than 1 km to secure transmission rate.
- At least 2 m distance should be kept between two adjacent devices.
- The devices should be installed face to face and the max. angle of deviation is 30°.
- Install the device in the place where the maintenance personnel can operate easily.
- Make sure the device is installed vertically in forward direction, while not horizontally or in reverse direction.
- Make sure the water-proof cover is installed.
- Protect the power adapter and PoE injector from rain. It is suggested to put them into a waterproof case or keep them in a dry place.
- It is suggested to manage the gap between cover and device with fluid dispensing.
- Disconnect the power supply when you have the device serviced.
- The temperature of the cover area will be high when the device is working. In the circumstances, only personnel with relevant professional knowledge, such as installation and maintenance personnel, are allowed to operate the device.

Pole Installation

Mount the device on the pole with a diameter of 40 to 100 mm using the attached cable tie. Please read and follow the steps:

1. Thread the cable ties into the installation holes at the back of the device.

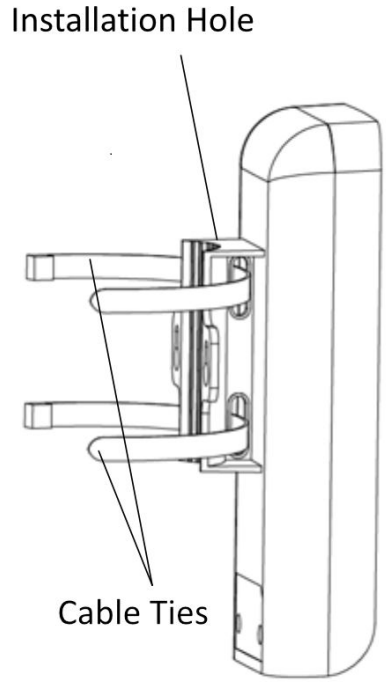

Figure 3-39 Thread Cable Ties

2. Fix and fasten the cable ties on the pole.

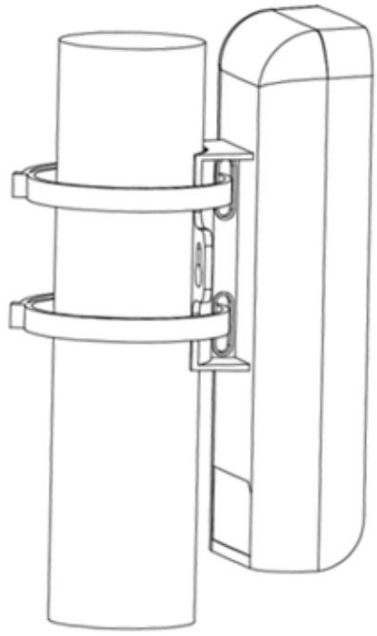

Figure 3-40 Fix Device

Note

Adjust the direction of the device manually to keep the device installed vertically.

Device Connection

Based on the actual situations, connect the device according to the following wiring steps.

Note

- Use the attached power adapter and PoE injector to power on the device.
- The power adapter and PoE injector must be connected to an earthed socket outlet.

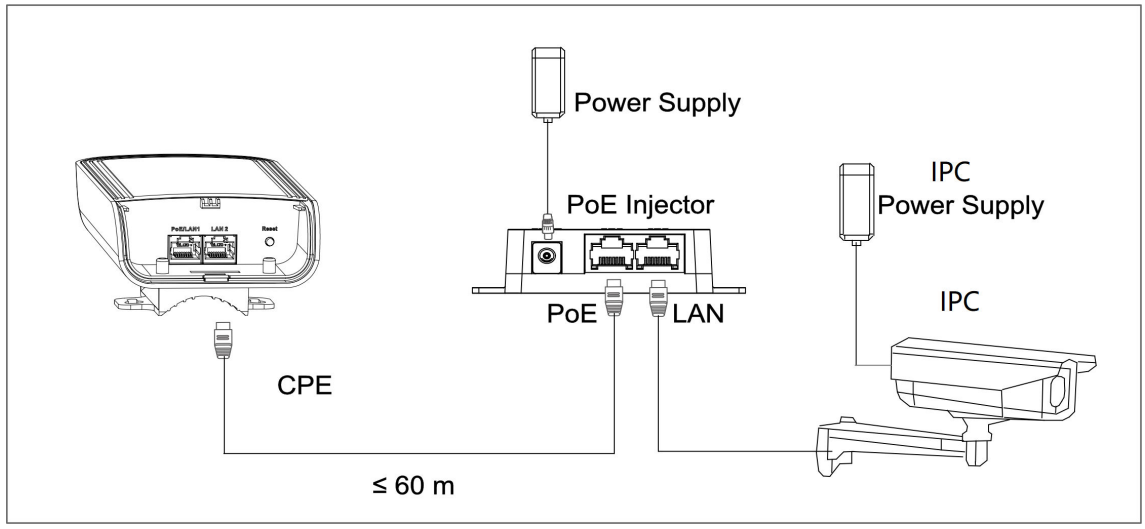

Figure 3-41 CPE Connection

After you finish the device connection, check device working status, network connection, and signal strength according to indicators.

3.3 5GHz 1km

3.3.1 DS-3WF0FA-5AC/O

The 5 GHz wireless bridge (hereinafter referred to as *the device*) is used for wireless transmission within 1 km. It supports 16 sets of SSID, achieving point-to-point and point-to-multipoint transmission, which can guarantee the multi-channel HD video transmission for outdoor video security.

Packing List

Please check if there is any damage of the package first. According to the packing list, make sure no item is lost. After checking all the items included, you can continue to install the device.

Table 3-19 Packing List

Item	Appearance	Quantity
Wireless Bridge	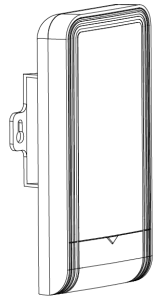	× 1
PoE Power Supply	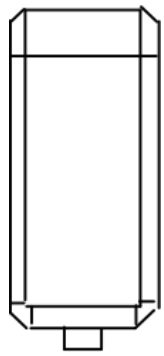	× 1
AC Cord (Connect to the PoE Power Supply)	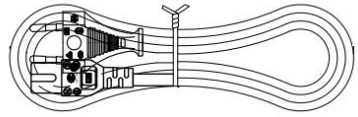	× 1
Antenna (with accessory bag)	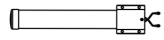	× 1
Cable Tie		× 2

Item	Appearance	Quantity
Quick Start Guide	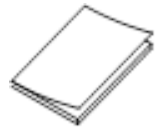	× 1
Regulatory Compliance and Safety Information	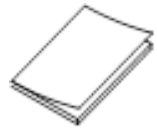	× 1

Note

The device image used here is only for example purpose. The actual device may vary with models.

Interface/Button

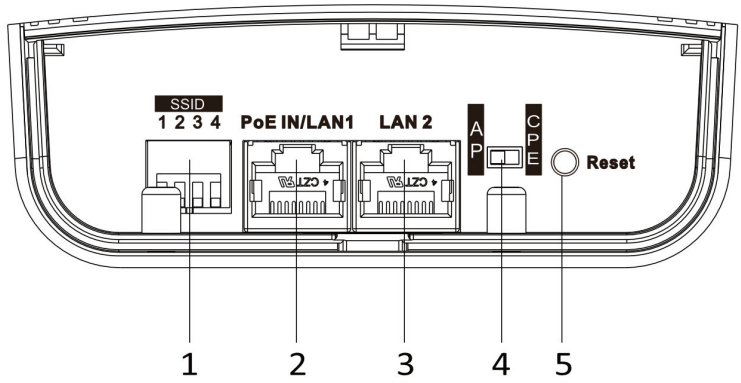

Figure 3-42 Device Interface/Button

Table 3-20 Device Interface/Button Description

No.	Interface/Button	Description
1	SSID	Switch up or down to set a 4-character SSID. CPE and AP will match when their SSIDs are the same. **Note** The AP's SSID should be unique.
2	PoE IN/LAN 1	The 10/100/1000 Mbps adaptive RJ45 port, also can be used as a PoE port.

No.	Interface/Button	Description
3	LAN 2	The 10/100/1000 Mbps adaptive RJ45 port.
4	CPE/AP DIP Switch	Switch up or down / left or right to set the device as AP or CPE.
5	Reset	Long press for 4 seconds to restore to factory settings.

SSID

4-character SSID can realize 16 sets of matching ways by switching the DIP up or down.

Note

Please switch the CPE/AP DIP Switch to set which scene the device is used as before setting the SSID.

Table 3-21 SSID No. Introduction

No.	DIP	No.	DIP	No.	DIP	No.	DIP
1	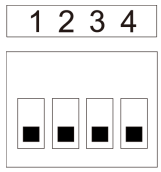	2	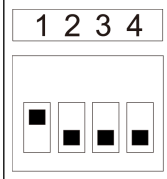	3	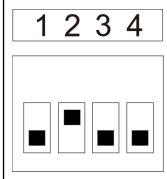	4	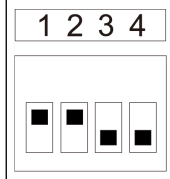
5	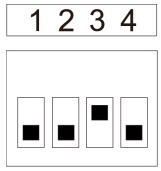	6	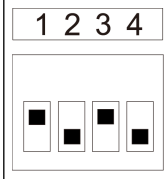	7	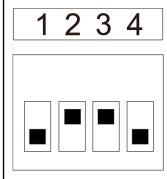	8	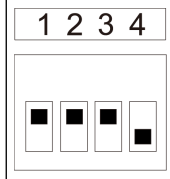
9	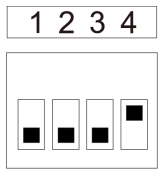	10	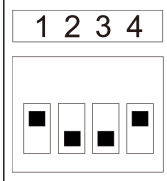	11	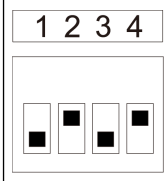	12	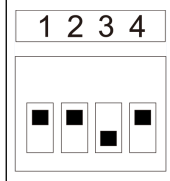
13	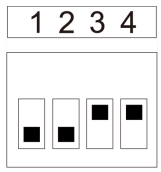	14	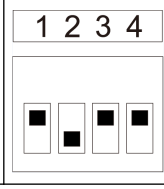	15	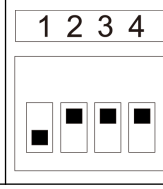	16	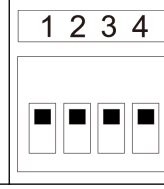

Indicator

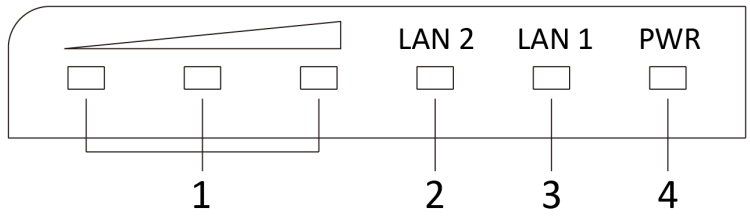

Figure 3-43 Device Indicator

Table 3-22 Device Indicator Description

No.	Indicator	Description	
1	Signal Strength Indicator	Solid on	The devices are matched. • Solid red, yellow, and green: The wireless signal is strong. • Solid red and yellow, unlit green: The wireless signal is normal. • Solid red, unlit yellow and green: The wireless signal is weak. Please adjust the position and direction of the device.
		Unlit	The devices are not matched.
2/3	LAN 2/LAN Indicator	Solid Green	The port is connected.
		Flashing Green	The port is transmitting data. The faster the indicator flashes, the greater the transmission rate is.
		Unlit	The port is disconnected or connection is abnormal.
4	Power Indicator	Solid Green	The device is powered on normally
		Unlit	No power supply connected or power supply is abnormal.

Application Scene

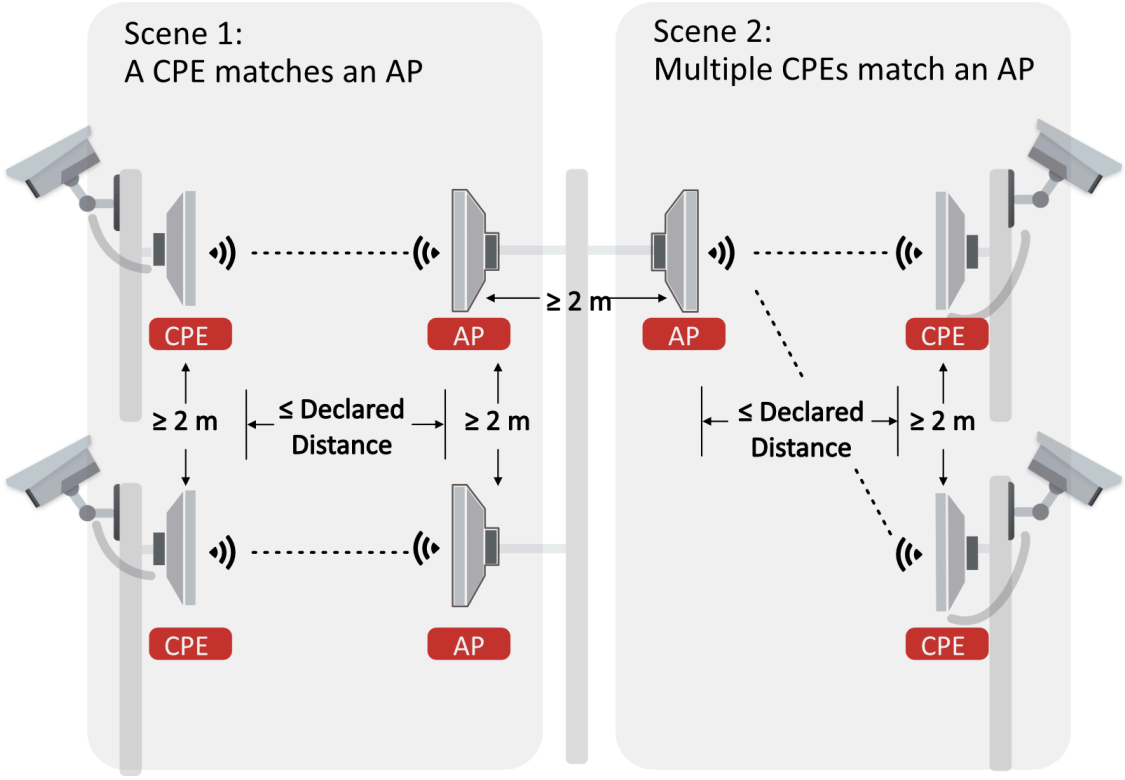

Figure 3-44 Application Scene

Preparation for Installation

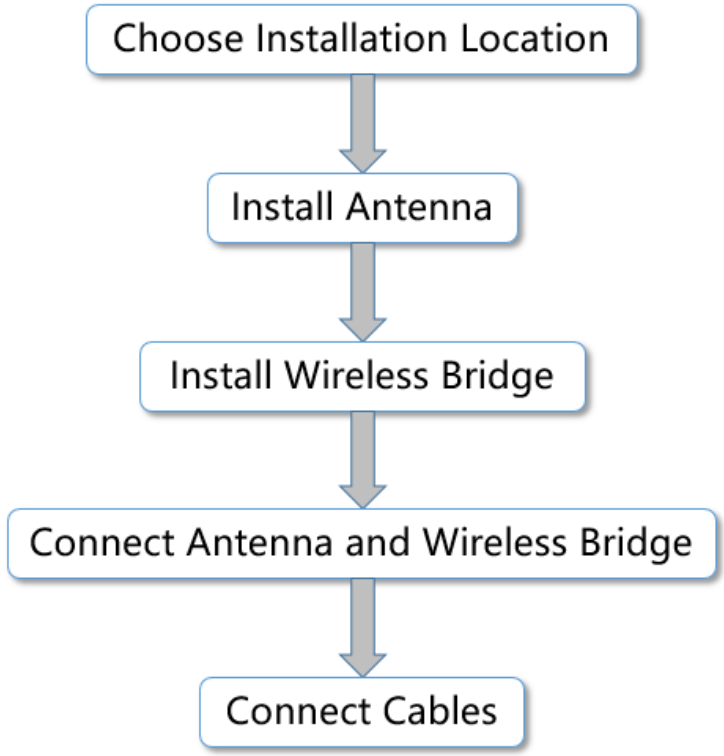

Figure 3-45 Installation Procedure

To avoid device damage or personal injury caused by improper usage of the device, please follow the preparations below.

- Use the attached PoE power supply to power the device.
- The distance between AP and CPE should be less than 1 km to secure transmission rate.
- At least 2 m distance should be kept between two adjacent devices.
- The devices should be installed face to face and the max. angle of deviation is 30°.
- Install the device in the place where the maintenance personnel can operate easily.
- Make sure the device is installed vertically in forward direction, while not horizontally or in reverse direction.
- Make sure the water-proof cover is installed.
- Protect the PoE power supply from rain. It is suggested to put them into a waterproof case or keep them in a dry place.
- It is suggested to manage the gap between cover and device with fluid dispensing.
- Disconnect the power supply when you have the device serviced.
- The temperature of the cover area will be high when the device is working. In the circumstances, only personnel with relevant professional knowledge, such as installation and maintenance personnel, are allowed to operate the device.

Antenna Installation

By using the attached accessories, the antenna can be installed onto a mounting pole (user supplied) with a diameter of 30 to 70 mm.

Steps:

1. Remove the nuts, spring washers, and flat washers from the bolts (× 4).
2. Insert the bolts (× 4) into the bolt holes of the antenna.
3. Place the antenna with bolts against the mounting pole.

Note

Place the bottom part of the antenna against the top of the mounting pole, to ensure the antenna is not blocked by the pole.

4. Align the holes on the toothed clamp with the bolts, and fix the clamp onto the bolts by putting back the flat washers, spring washers, and nuts.
5. Adjust the antenna until it is perfectly vertical and tighten the nuts to secure the whole antenna set onto the mounting pole.

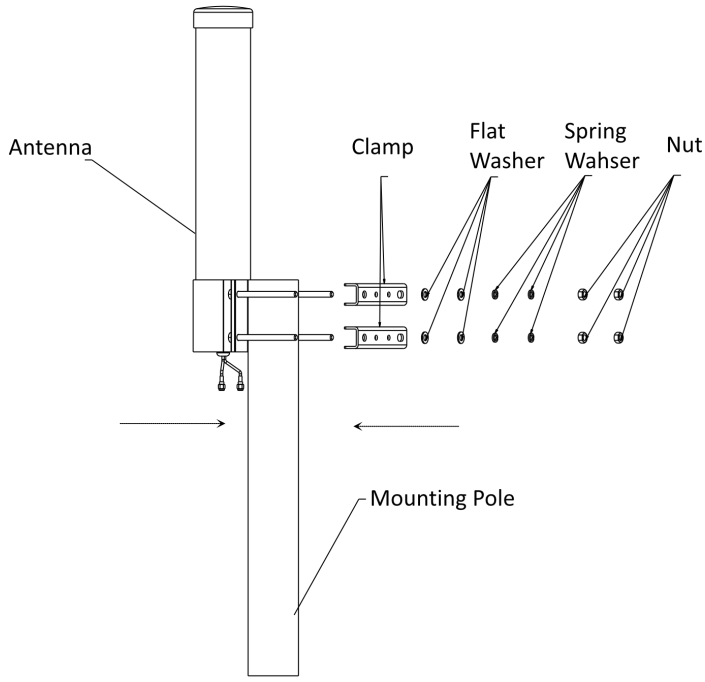

Figure 3-46 Install Antenna

Wireless Bridge Installation

The wireless bridge can be installed onto the mounting pole or a wall. The following simply illustrates how to install the device onto the pole:

Note

It is easy to take down the wall-mounted device. You are recommended to install the device onto a mounting pole.

1. Choose an appropriate installation site for the wireless bridge below the antenna on the pole.

   Note

   The vertical distance between the antenna and the wireless bridge should be within 100 mm.

2. Thread the cable ties (× 2) into the installation holes at the back of the wireless bridge.

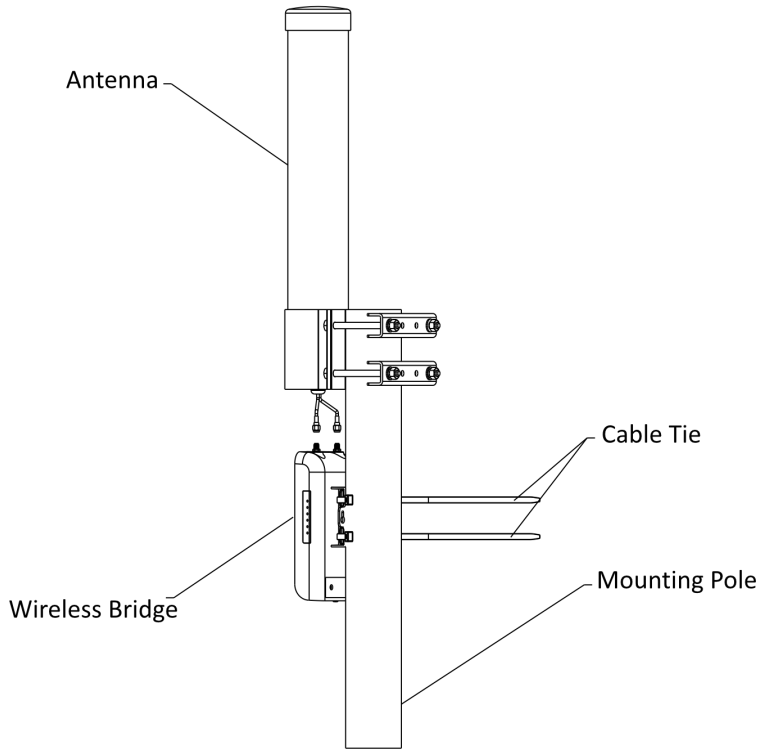

Figure 3-47 Thread Cable Ties

3. Fix and fasten the cable ties on the pole.
4. Adjust the direction of the device manually to keep it installed vertically.

Antenna Connection

After proper installation of the antenna and the wireless bridge, you are allowed to connect the antenna to the wireless bridge by connecting the antenna cables at the bottom of the antenna to the antenna connectors on the top of the wireless bridge.

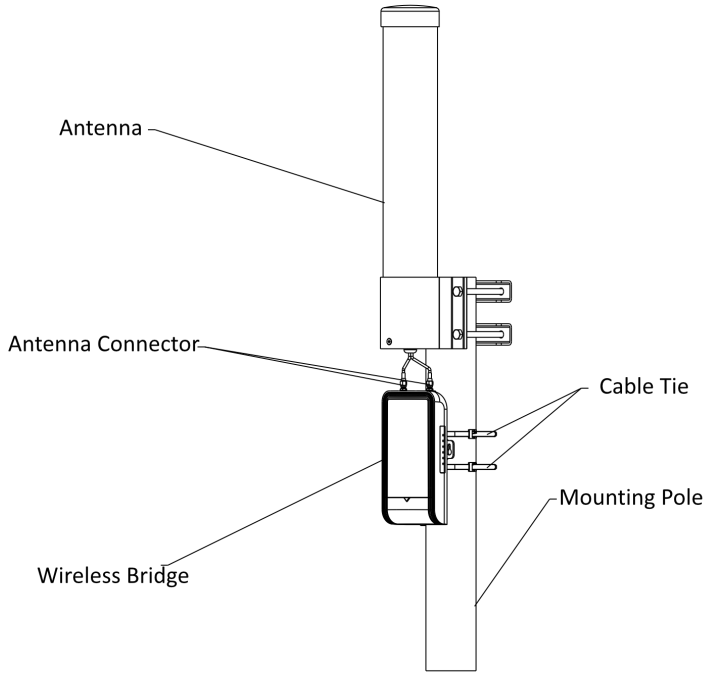

Figure 3-48 Connect Antenna

Device Connection

Based on the actual situations, connect the device according to the following wiring steps.

Note

- The device can be powered on in various ways, you can use the attached PoE power adapter or use other applicable power supply accessories (user supplied) to power on the device.
- The device should be paired with another device of the same model or another compatible wireless bridge.
- The SSIDs of APs in the same direction cannot be the same, to avoid matching failure.

1. **AP connection:**
   a. Switch the CPE/AP DIP to set the device as AP.
   b. Set SSID (Set SSID NO. 1 for example).
   c. Power on the AP device by the PoE power supply or PoE switch.

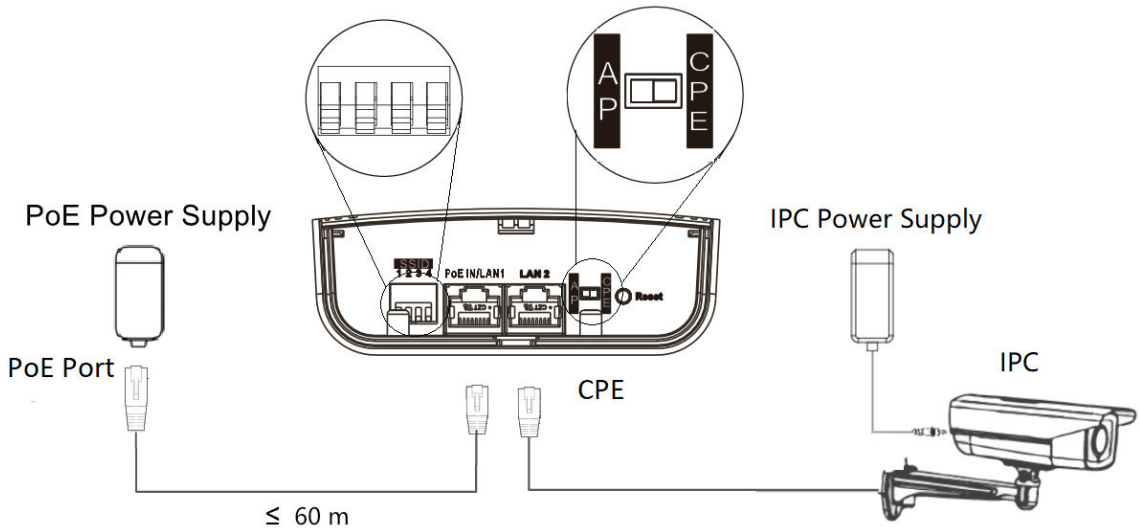

Figure 3-49 AP Connection (With PoE Power Supply)

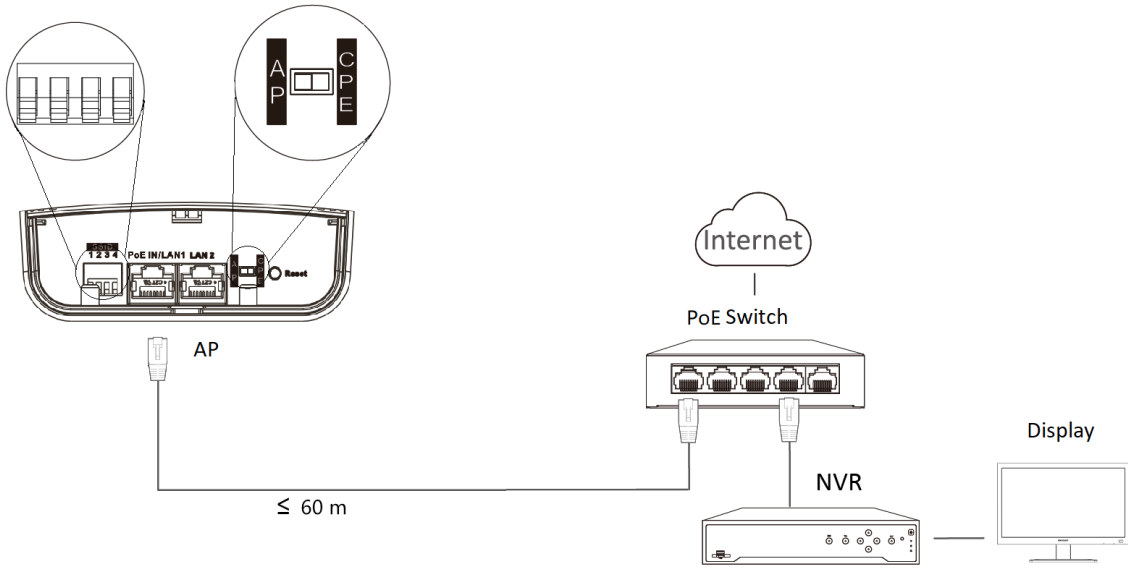

Figure 3-50 AP Connection (With PoE Switch)

2. **CPE connection:**
   a. Switch the CPE/AP DIP to set the device as CPE.
   b. Select the SSID No. set on the AP to match (Select SSID NO. 1 for example).
   c. CPE device can supply power to IPC.

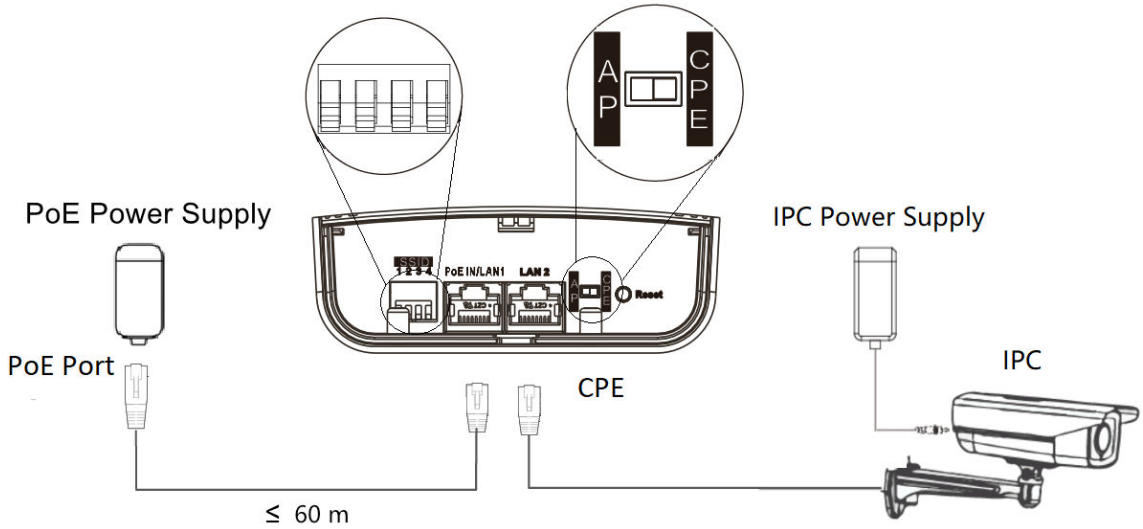

Figure 3-51 CPE Connection (with PoE Power Supply)

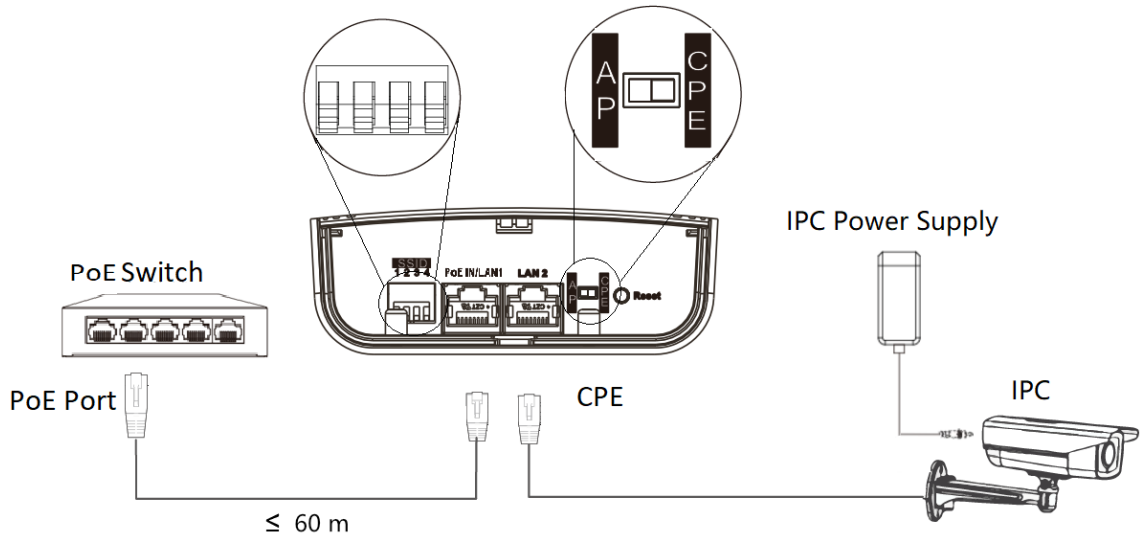

Figure 3-52 CPE Connection (with PoE Switch)

d. Optional: If there are more than one CPE (no more than 4) to be matched with one AP, repeat the previous steps connect and set the CPEs.

3. After you finish the device connection, check device working status, network connection, and signal strength according to indicators.

3.4 5GHz 3km

3.4.1 DS-3WF3000-EI-5AC/P

The 5 GHz wireless bridge (hereinafter referred to as *the device*) is used for wireless transmission within 3 km. It supports point-to-point transmission and can guarantee the multi-channel HD video transmission for outdoor video security.

Packing List

Please check if there is any damage of the package first. According to the packing list, make sure no item is lost. After checking all the items included, you can continue to install the device.

Table 3-23 Packing List

Item	Appearance	Quantity
Wireless Bridge	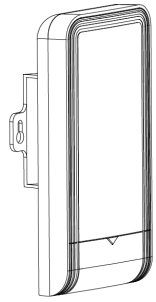	× 2
PoE Power Supply	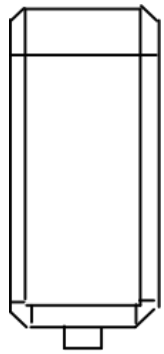	× 2
AC Cord (Connect to the PoE Power Supply)	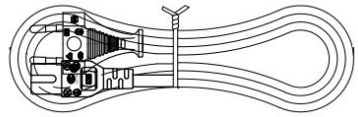	× 2

Item	Appearance	Quantity
Cable Tie		× 4
Quick Start Guide	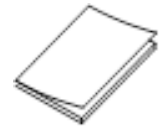	× 1
Regulatory Compliance and Safety Information	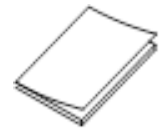	× 1

Note

The device image used here is only for example purpose. The actual device may vary with models.

Interface/Button

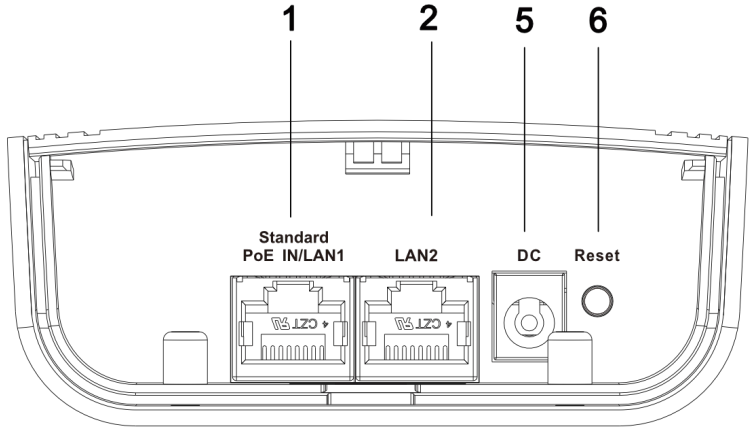

Figure 3-53 AP Device Interface/Button

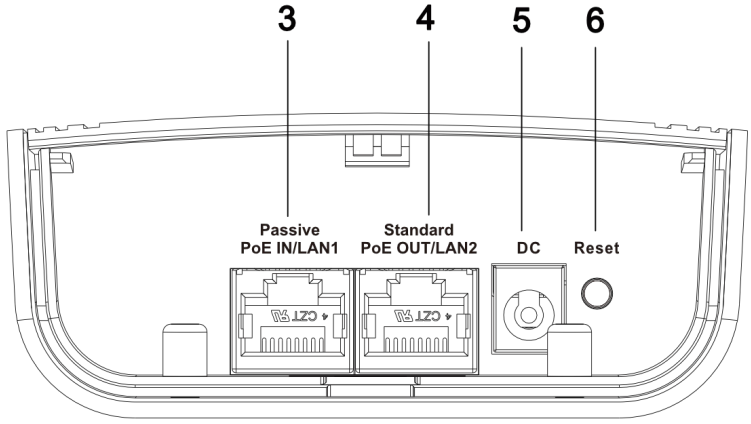

Figure 3-54 CPE Device Interface/Button

Table 3-24 Device Interface/Button Description

No.	Interface/Button	Description
1	Standard PoE IN/LAN 1	The 10/100 Mbps adaptive RJ45 port, also can be used as a standard PoE input port.
2	LAN 2	The 10/100 Mbps adaptive RJ45 port.
3	Passive PoE IN/LAN 1	The 10/100 Mbps adaptive RJ45 port, also can be used as a passive PoE input port.
4	Standard PoE OUT/LAN 2	The 10/100 Mbps adaptive RJ45 port, also can be used as a standard PoE output port.
5	DC	Support DC 12~24V power supply. **Note** PoE OUT is not available when the device is powered by DC port.
6	Reset	Long press for 4 seconds to restore to factory settings.

Indicator

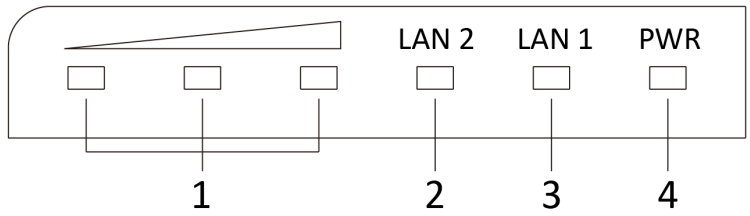

Figure 3-55 Device Indicator

Table 3-25 Device Indicator Description

No.	Indicator	Description	
1	Signal Strength Indicator	Solid on	The devices are matched. • Solid red, yellow, and green: The wireless signal is strong. • Solid red and yellow, unlit green: The wireless signal is normal. • Solid red, unlit yellow and green: The wireless signal is weak. Please adjust the position and direction of the device.
		Unlit	The devices are not matched.
2/3	LAN 2/LAN Indicator	Solid Green	The port is connected.
		Flashing Green	The port is transmitting data. The faster the indicator flashes, the greater the transmission rate is.
		Unlit	The port is disconnected or connection is abnormal.
4	Power Indicator	Solid Green	The device is powered on normally
		Unlit	No power supply connected or power supply is abnormal.

Application Scene

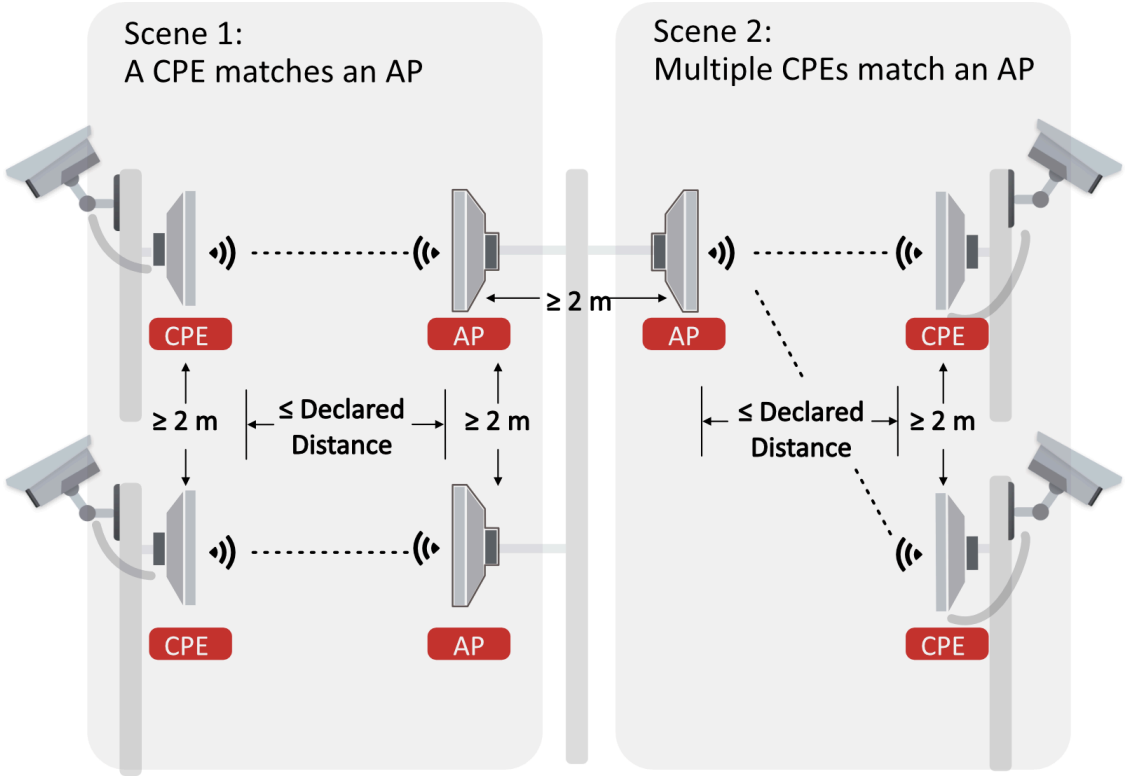

Figure 3-56 Application Scene

Preparation for Installation

To avoid device damage or personal injury caused by improper usage of the device, please follow the preparations below.

- Use the attached PoE power supply to power the device.
- The distance between AP and CPE should be less than 3 km to secure transmission rate.
- At least 2 m distance should be kept between two adjacent devices.
- The devices should be installed face to face and the max. angle of deviation is 30°.
- Install the device in the place where the maintenance personnel can operate easily.
- Make sure the device is installed vertically in forward direction, while not horizontally or in reverse direction.
- Make sure the water-proof cover is installed.
- Protect the PoE power supply from rain. It is suggested to put them into a waterproof case or keep them in a dry place.
- It is suggested to manage the gap between cover and device with fluid dispensing.
- Disconnect the power supply when you have the device serviced.
- The temperature of the cover area will be high when the device is working. In the circumstances, only personnel with relevant professional knowledge, such as installation and maintenance personnel, are allowed to operate the device.

Pole Installation

Mount the device on the pole with a diameter of 40 to 100 mm using the attached cable tie. Please read and follow the steps:

1. Thread the cable ties into the installation holes at the back of the device.

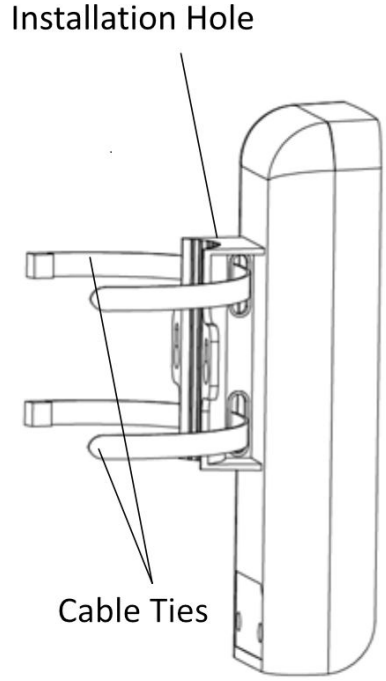

Figure 3-57 Thread Cable Ties

2. Fix and fasten the cable ties on the pole.

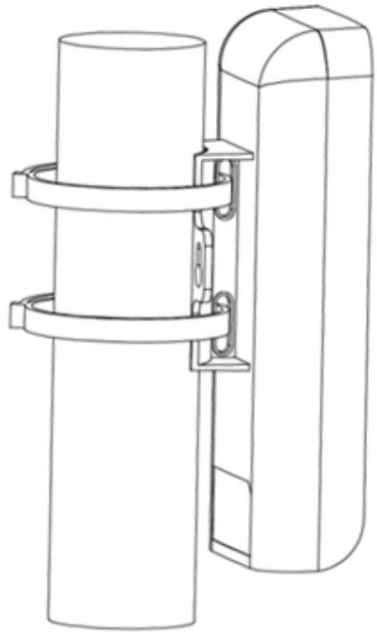

Figure 3-58 Fix Device

Note

Adjust the direction of the device manually to keep the device installed vertically.

Device Connection

Based on the actual situations, connect the device according to the following wiring steps.

Note

- Use the attached PoE power supply and AC cord to power on the device.
- The PoE power supply must be connected to an earthed socket outlet.
- The devices in the package should be used in pair and cannot be used arbitrarily together with another incompatible device.

1. **AP connection:** Power on the AP device by the PoE power supply or a PoE switch.

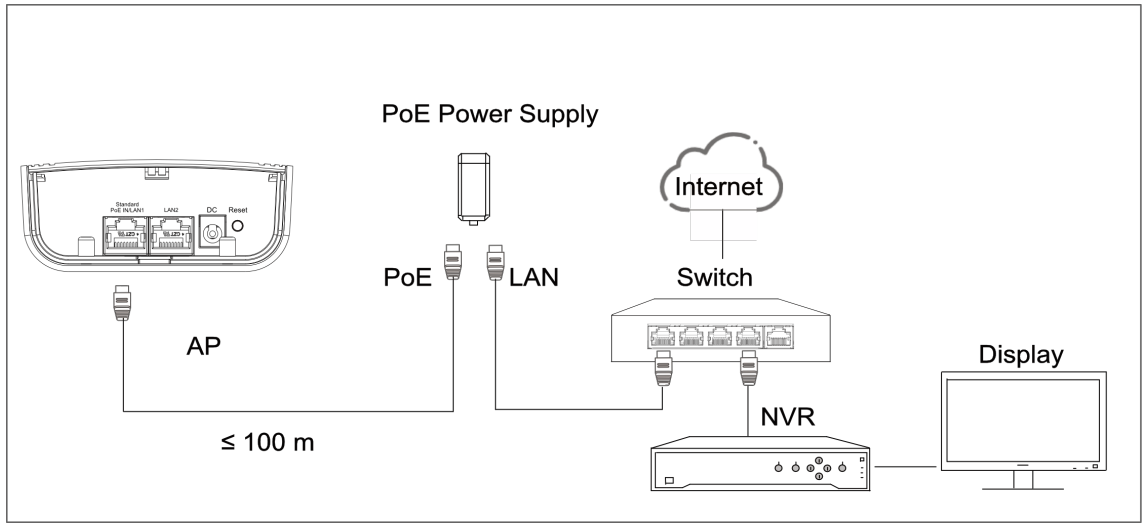

Figure 3-59 AP Connection (With PoE Power Supply)

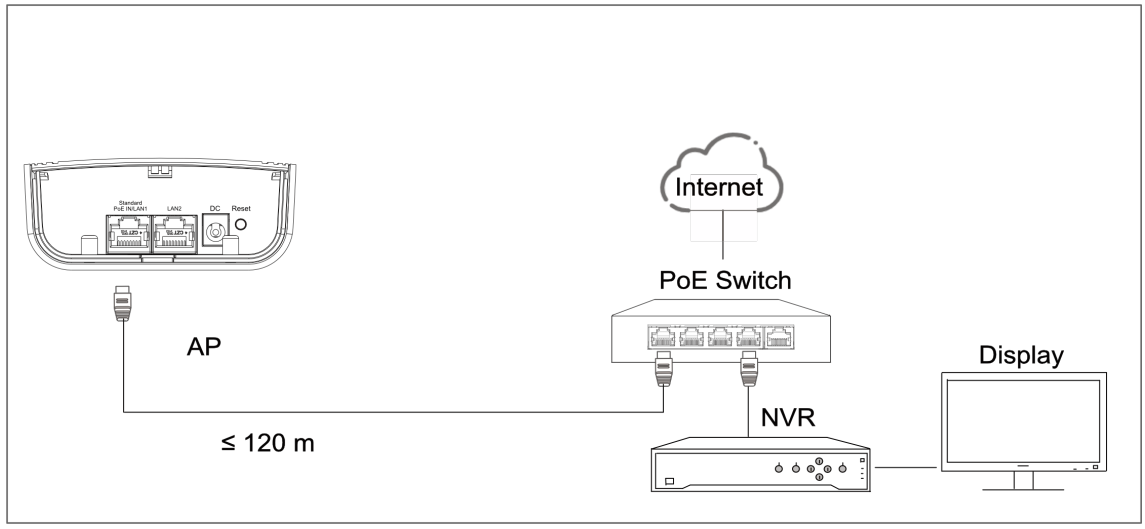

Figure 3-60 AP Connection (With PoE Switch)

2. **CPE connection:** CPE device can supply power to IPC.

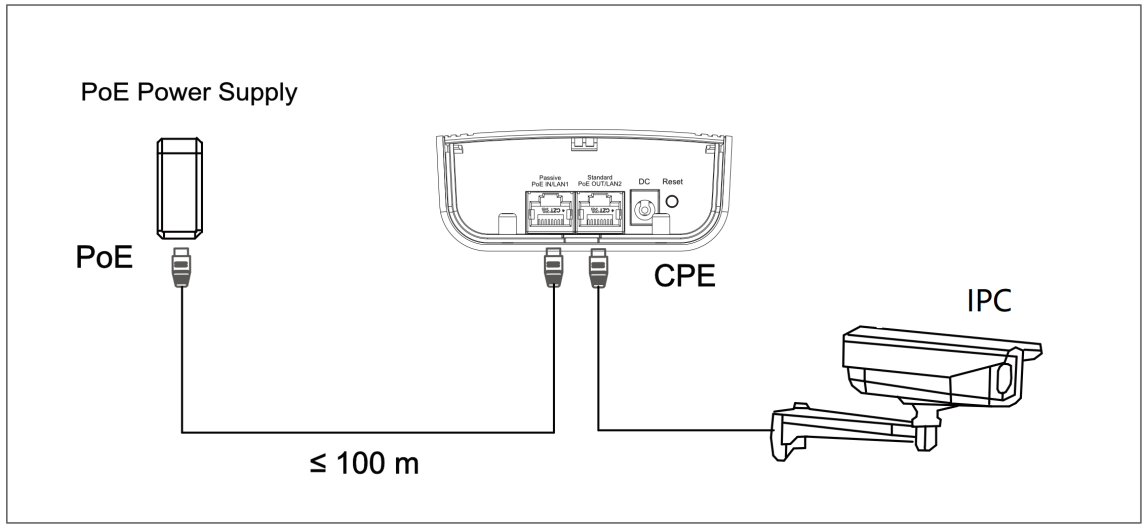

Figure 3-61 CPE Connection

3. After you finish the device connection, check device working status, network connection, and signal strength according to indicators.

3.4.2 DS-3WF3000S-EI-5AC/P

The 5 GHz wireless bridge (hereinafter referred to as *the device*) is used for wireless transmission within 3 km. It supports point-to-point transmission and can guarantee the multi-channel HD video transmission for outdoor video security.

Packing List

Please check if there is any damage of the package first. According to the packing list, make sure no item is lost. After checking all the items included, you can continue to install the device.

Table 3-26 Packing List

Item	Appearance	Quantity
Wireless Bridge	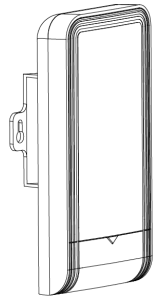	× 1
PoE Power Supply	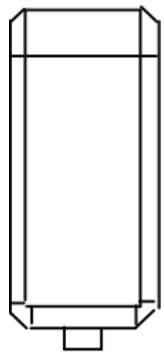	× 1
AC Cord (Connect to the PoE Power Supply)	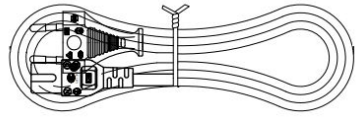	× 1
Cable Tie		× 2

Item	Appearance	Quantity
Quick Start Guide	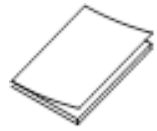	× 1
Regulatory Compliance and Safety Information	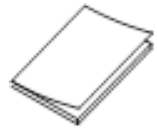	× 1

Note

The device image used here is only for example purpose. The actual device may vary with models.

Interface/Button

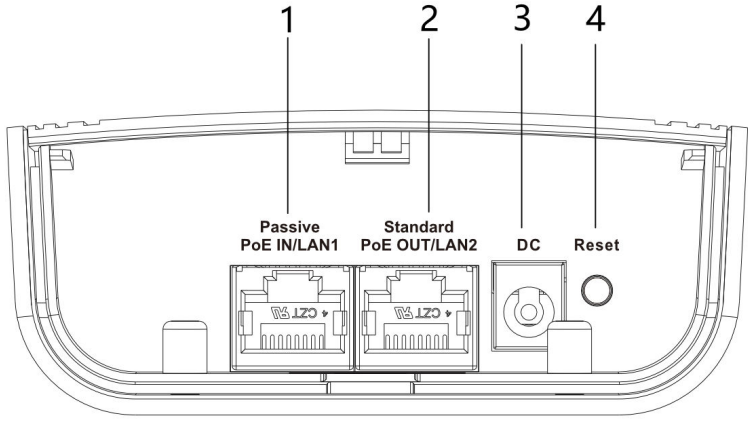

Figure 3-62 CPE Device Interface/Button

Table 3-27 Device Interface/Button Description

No.	Interface/Button	Description
1	Passive PoE IN/LAN 1	The 10/100 Mbps adaptive RJ45 port, also can be used as a standard PoE input port.
2	Standard PoE OUT/LAN 2	The 10/100 Mbps adaptive RJ45 port, also can be used as a standard PoE output port.
3	DC	Support DC 12~24V power supply.

No.	Interface/Button	Description
		Note PoE OUT is not available when the device is powered by DC port.
4	Reset	Long press for 4 seconds to restore to factory settings.

Indicator

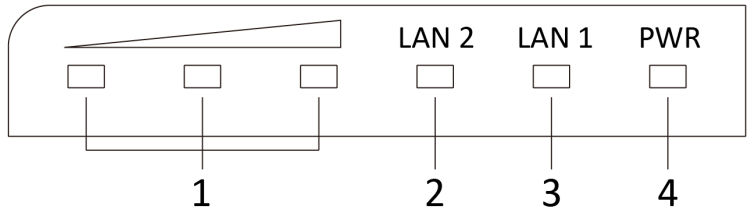

Figure 3-63 Device Indicator

Table 3-28 Device Indicator Description

No.	Indicator	Description	
1	Signal Strength Indicator	Solid on	The devices are matched. • Solid red, yellow, and green: The wireless signal is strong. • Solid red and yellow, unlit green: The wireless signal is normal. • Solid red, unlit yellow and green: The wireless signal is weak. Please adjust the position and direction of the device.
		Unlit	The devices are not matched.
2/3	LAN 2/LAN Indicator	Solid Green	The port is connected.
		Flashing Green	The port is transmitting data. The faster the indicator flashes, the greater the transmission rate is.
		Unlit	The port is disconnected or connection is abnormal.

No.	Indicator	Description	
4	Power Indicator	Solid Green	The device is powered on normally
		Unlit	No power supply connected or power supply is abnormal.

Application Scene

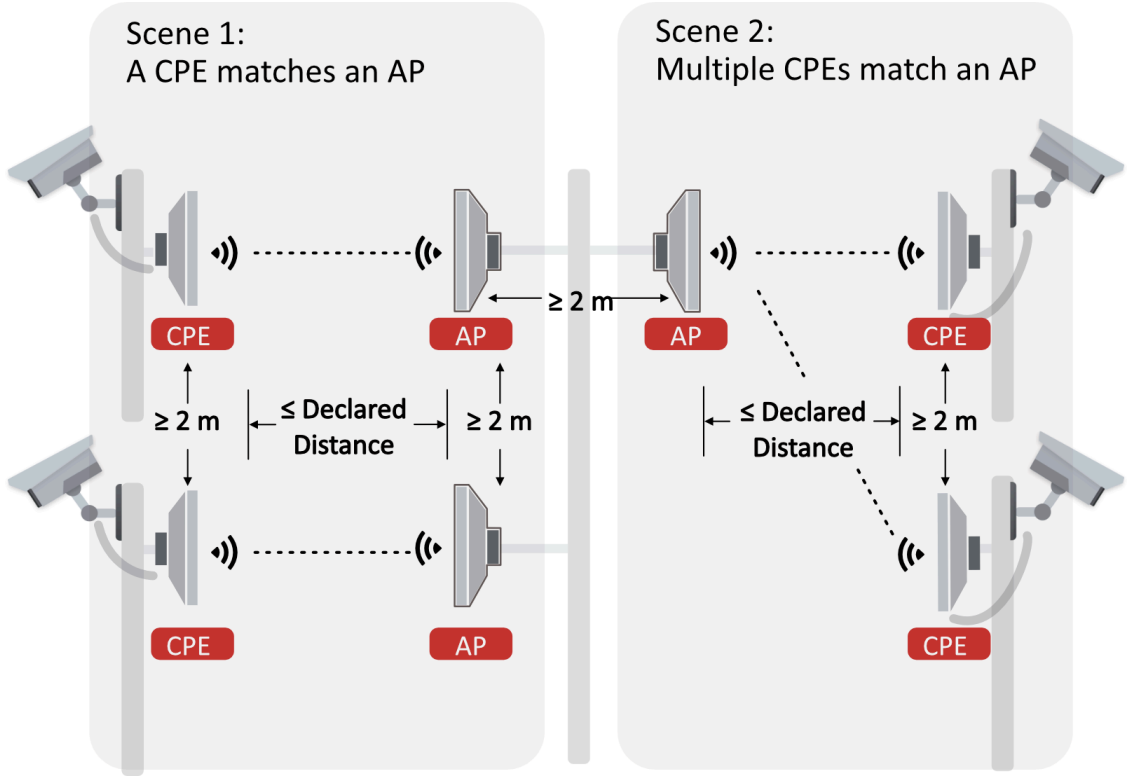

Figure 3-64 Application Scene

Preparation for Installation

To avoid device damage or personal injury caused by improper usage of the device, please follow the preparations below.

- Use the attached PoE power supply to power the device.
- The distance between AP and CPE should be less than 3 km to secure transmission rate.
- At least 2 m distance should be kept between two adjacent devices.
- The devices should be installed face to face and the max. angle of deviation is 30°.
- Install the device in the place where the maintenance personnel can operate easily.
- Make sure the device is installed vertically in forward direction, while not horizontally or in reverse direction.
- Make sure the water-proof cover is installed.

- Protect the PoE power supply from rain. It is suggested to put them into a waterproof case or keep them in a dry place.
- It is suggested to manage the gap between cover and device with fluid dispensing.
- Disconnect the power supply when you have the device serviced.
- The temperature of the cover area will be high when the device is working. In the circumstances, only personnel with relevant professional knowledge, such as installation and maintenance personnel, are allowed to operate the device.

Pole Installation

Mount the device on the pole with a diameter of 40 to 100 mm using the attached cable tie. Please read and follow the steps:

1. Thread the cable ties into the installation holes at the back of the device.

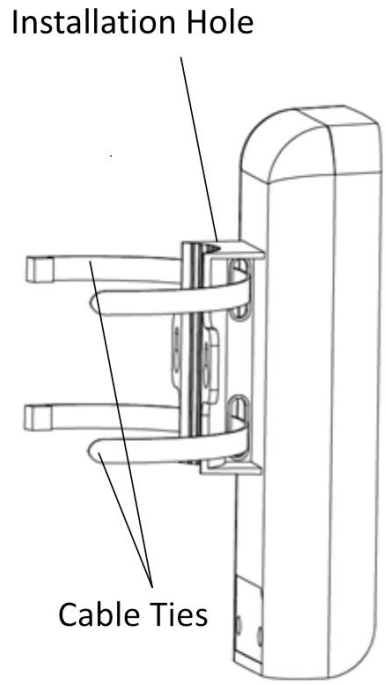

Figure 3-65 Thread Cable Ties

2. Fix and fasten the cable ties on the pole.

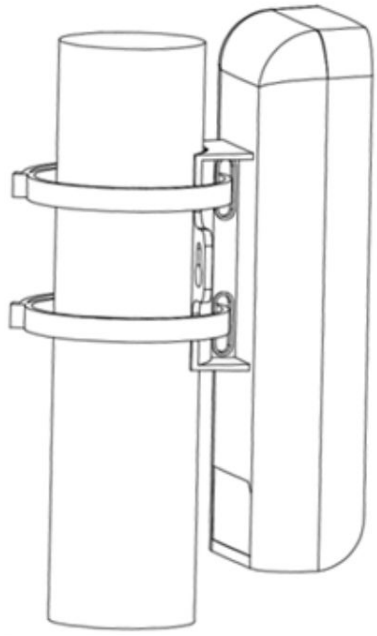

Figure 3-66 Fix Device

Note

Adjust the direction of the device manually to keep the device installed vertically.

Device Connection

CPE device can supply power to IPC.

Note

- Use the attached PoE power supply to power on the device.
- The PoE power supply must be connected to an earthed socket outlet.

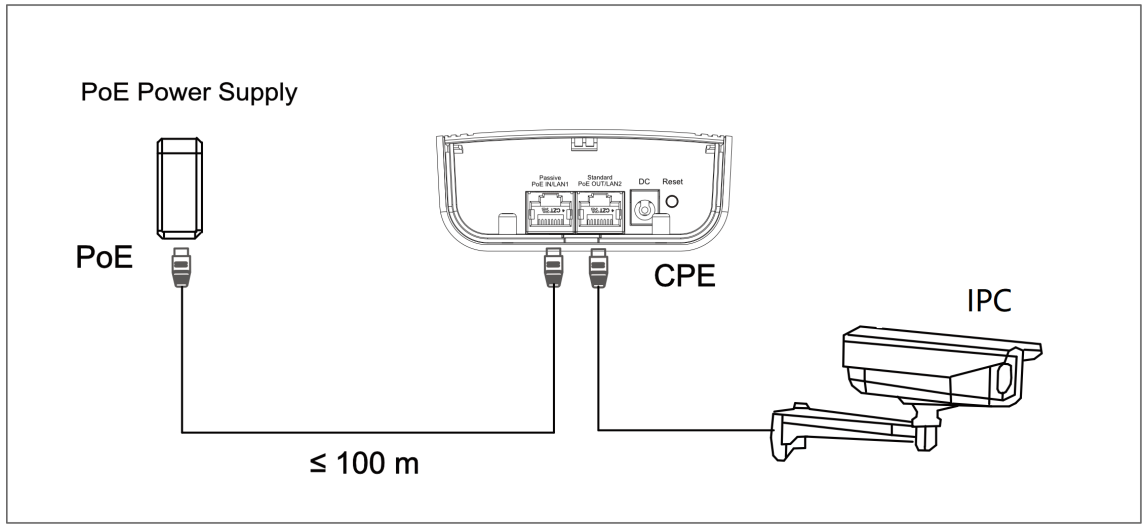

Figure 3-67 CPE Connection

After you finish the device connection, check device working status, network connection, and signal strength according to indicators.

3.5 5GHz 5km

3.5.1 DS-3WF02-5AC/D

The 5 GHz wireless bridge (hereinafter referred to as *the device*) is used for wireless transmission within 5 km. It supports point-to-point transmission and can guarantee the multi-channel HD video transmission for outdoor video security.

Packing List

Please check if there is any damage of the package first. According to the packing list, make sure no item is lost. After checking all the items included, you can continue to install the device.

Table 3-29 Packing List

Item	Appearance	Quantity
Wireless Bridge	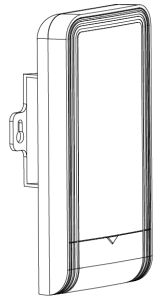	× 2
PoE Power Supply	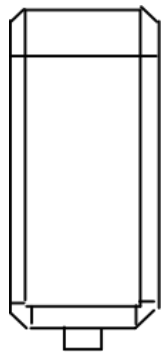	× 2
AC Cord (Connect to the PoE Power Supply)	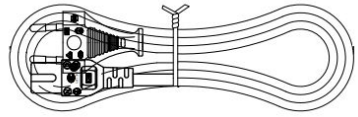	× 2
Cable Tie		× 4

Item	Appearance	Quantity
Quick Start Guide	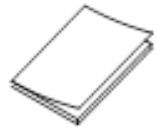	× 1
Regulatory Compliance and Safety Information	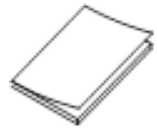	× 1

Note

The device image used here is only for example purpose. The actual device may vary with models.

Interface/Button

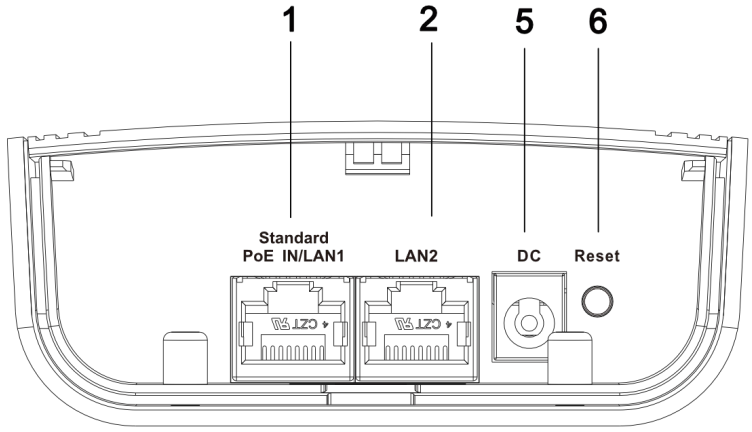

Figure 3-68 AP Device Interface/Button

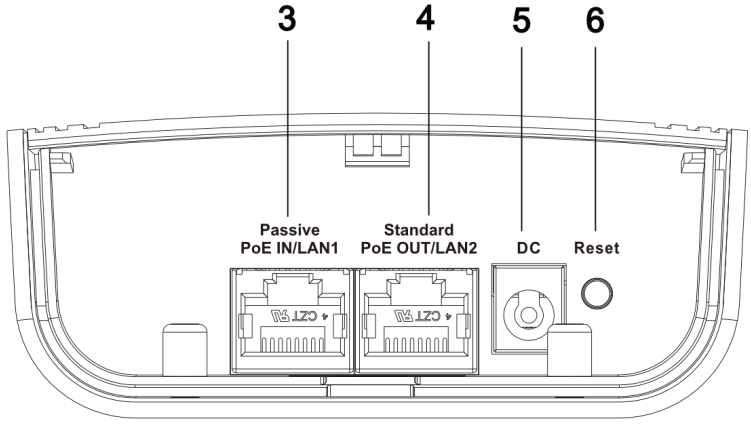

Figure 3-69 CPE Device Interface/Button

Table 3-30 Device Interface/Button Description

No.	Interface/Button	Description
1	Standard PoE IN/LAN 1	The 10/100 Mbps adaptive RJ45 port, also can be used as a standard PoE input port.
2	LAN 2	The 10/100 Mbps adaptive RJ45 port.
3	Passive PoE IN/LAN 1	The 10/100 Mbps adaptive RJ45 port, also can be used as a passive PoE input port.
4	Standard PoE OUT/LAN 2	The 10/100 Mbps adaptive RJ45 port, also can be used as a standard PoE output port.
5	DC	Support DC 12~24V power supply. **Note** PoE OUT is not available when the device is powered by DC port.
6	Reset	Long press for 4 seconds to restore to factory settings.

Indicator

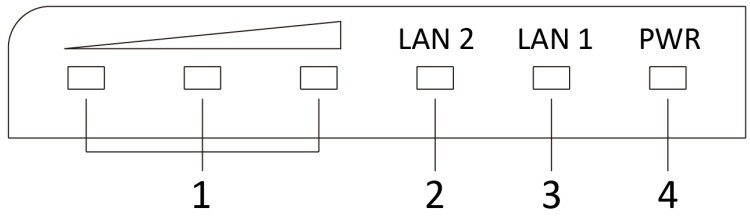

Figure 3-70 Device Indicator

Table 3-31 Device Indicator Description

No.	Indicator	Description	
1	Signal Strength Indicator	Solid on	The devices are matched. • Solid red, yellow, and green: The wireless signal is strong. • Solid red and yellow, unlit green: The wireless signal is normal. • Solid red, unlit yellow and green: The wireless signal is weak. Please adjust the position and direction of the device.
		Unlit	The devices are not matched.
2/3	LAN 2/LAN Indicator	Solid Green	The port is connected.
		Flashing Green	The port is transmitting data. The faster the indicator flashes, the greater the transmission rate is.
		Unlit	The port is disconnected or connection is abnormal.
4	Power Indicator	Solid Green	The device is powered on normally
		Unlit	No power supply connected or power supply is abnormal.

Application Scene

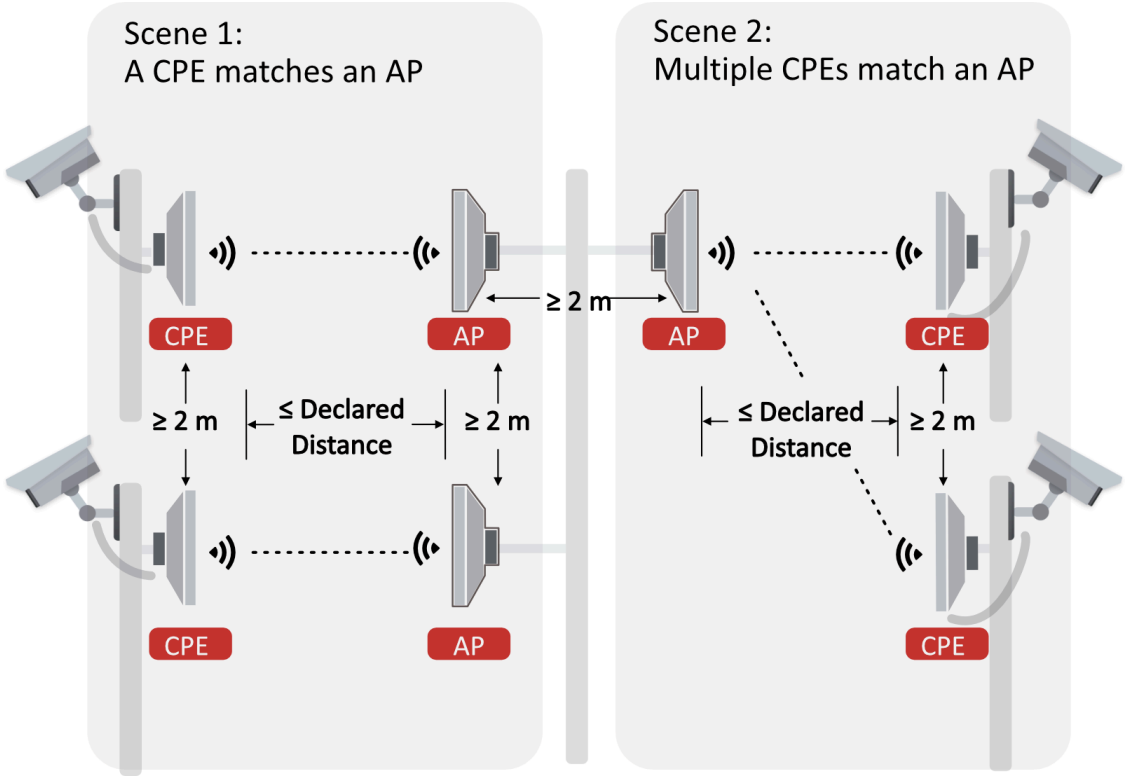

Figure 3-71 Application Scene

Preparation for Installation

To avoid device damage or personal injury caused by improper usage of the device, please follow the preparations below.

- Use the attached PoE power supply to power the device.
- The distance between AP and CPE should be less than 5 km to secure transmission rate.
- At least 2 m distance should be kept between two adjacent devices.
- The devices should be installed face to face and the max. angle of deviation is 30°.
- Install the device in the place where the maintenance personnel can operate easily.
- Make sure the device is installed vertically in forward direction, while not horizontally or in reverse direction.
- Make sure the water-proof cover is installed.
- Protect the PoE power supply from rain. It is suggested to put them into a waterproof case or keep them in a dry place.
- It is suggested to manage the gap between cover and device with fluid dispensing.
- Disconnect the power supply when you have the device serviced.
- The temperature of the cover area will be high when the device is working. In the circumstances, only personnel with relevant professional knowledge, such as installation and maintenance personnel, are allowed to operate the device.

Pole Installation

Mount the device on the pole with a diameter of 40 to 100 mm using the attached cable tie. Please read and follow the steps:

1. Thread the cable ties into the installation holes at the back of the device.

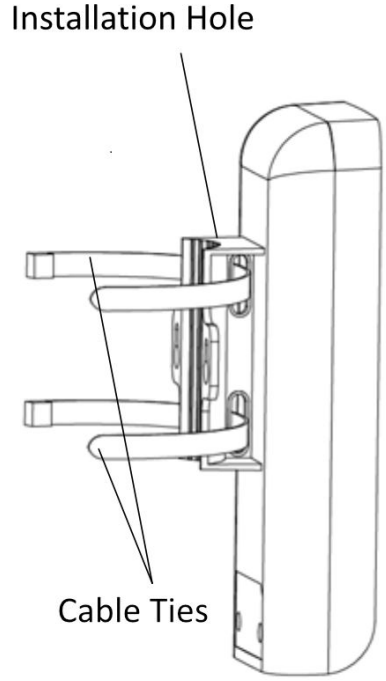

Figure 3-72 Thread Cable Ties

2. Fix and fasten the cable ties on the pole.

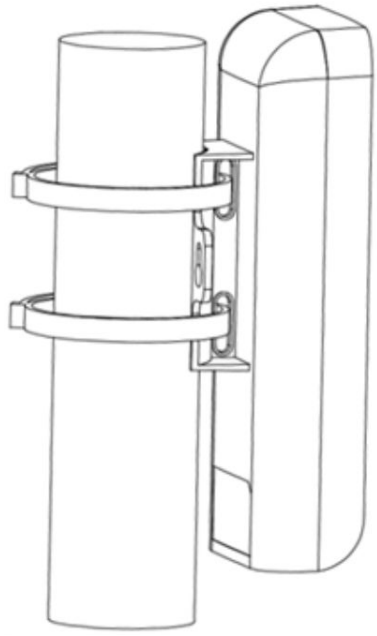

Figure 3-73 Fix Device

Note

Adjust the direction of the device manually to keep the device installed vertically.

Device Connection

Based on the actual situations, connect the device according to the following wiring steps.

Note

- Use the attached PoE power supply to power on the device.
- The PoE power supply must be connected to an earthed socket outlet.
- The devices in the package should be used in pair and cannot be used arbitrarily together with another incompatible device.

1. **AP connection:** Power on the AP device by the PoE power supply or a PoE switch.

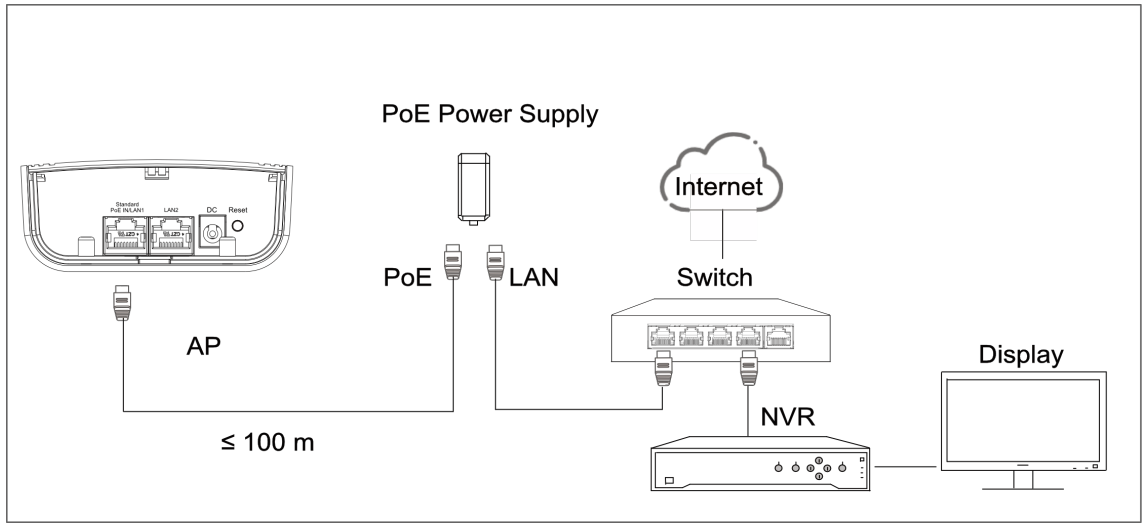

Figure 3-74 AP Connection (With PoE Power Supply)

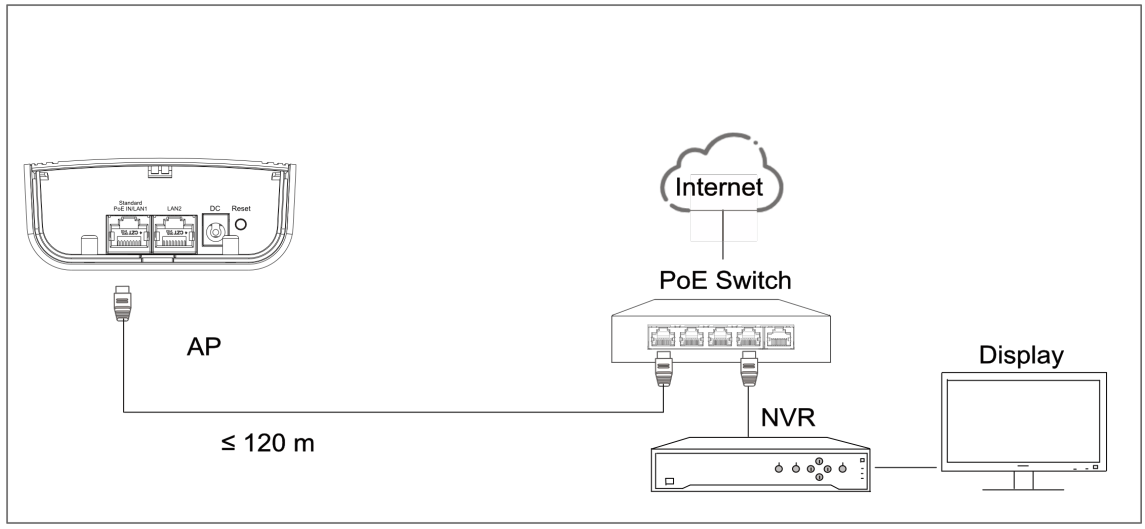

Figure 3-75 AP Connection (With PoE Switch)

2. **CPE connection:** CPE device can supply power to IPC.

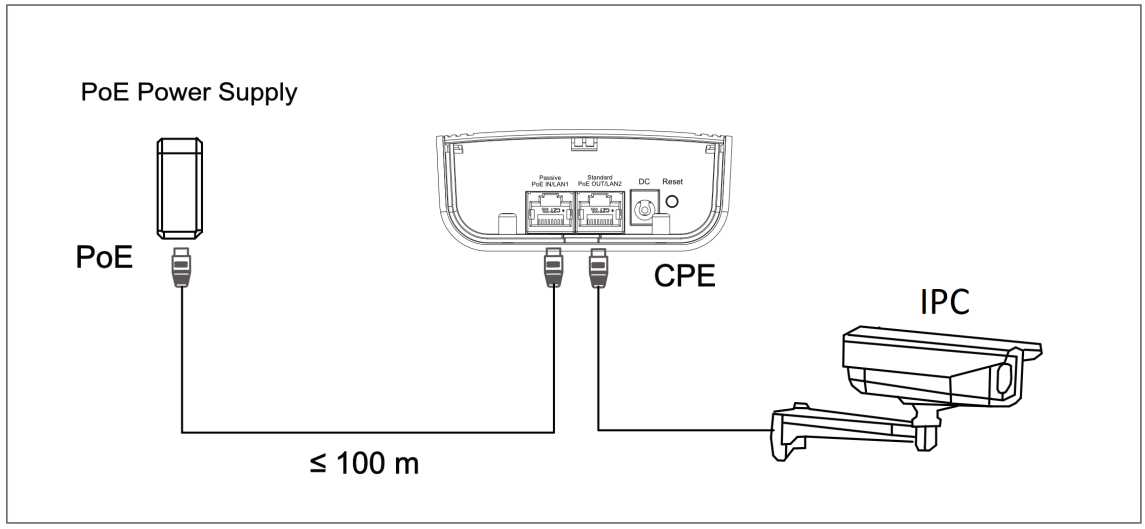

Figure 3-76 CPE Connection

3. After you finish the device connection, check device working status, network connection, and signal strength according to indicators.

3.5.2 DS-3WF02C-5AC/O

The 5 GHz wireless bridge (hereinafter referred to as *the device*) is used for wireless transmission within 5 km. It supports 16 sets of SSID, achieving point-to-point and point-to-multipoint transmission, which can guarantee the multi-channel HD video transmission for outdoor video security.

Packing List

Please check if there is any damage of the package first. According to the packing list, make sure no item is lost. After checking all the items included, you can continue to install the device.

Table 3-32 Packing List

Item	Appearance	Quantity
Wireless Bridge	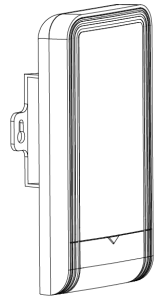	× 1
PoE Injector	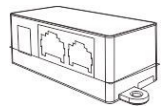	× 1
Power Adapter	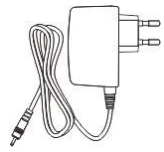	× 1
Cable Tie		× 2
Quick Start Guide	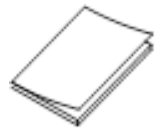	× 1
Regulatory Compliance and Safety Information	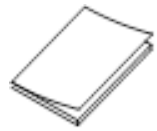	× 1

Note

The device image used here is only for example purpose. The actual device may vary with models.

Interface/Button

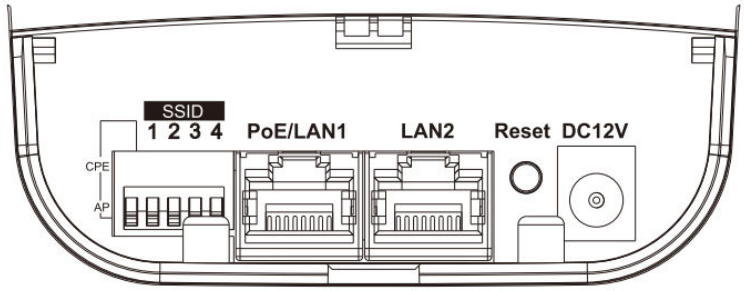

Figure 3-77 Device Interface/Button

Table 3-33 Device Interface/Button Description

Interface/Button	Description
CPE/AP DIP Switch	Switch up or down to set the device as AP or CPE.
SSID	Switch up or down to set a 4-character SSID. CPE and AP will match when their SSIDs are the same. **Note** The AP's SSID should be unique.
PoE IN/LAN 1	The 10/100/1000 Mbps adaptive RJ45 port, also can be used as a PoE port.
LAN 2	The 10/100/1000 Mbps adaptive RJ45 port.
DC 12V	Support DC 12 power supply. **Note** If the PoE injector is not used for powering on the device, you can use the attached power adapter to connect the device to socket.
Reset	Long press for 4 seconds to restore to factory settings.

SSID

4-character SSID can realize 16 sets of matching ways by switching the DIP up or down.

Note

Please switch the CPE/AP DIP Switch to set which scene the device is used as before setting the SSID.

Table 3-34 SSID No. Introduction

No.	DIP	No.	DIP	No.	DIP	No.	DIP
1	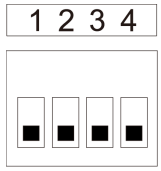	2	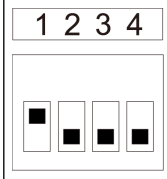	3	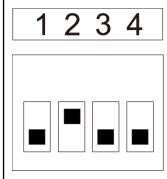	4	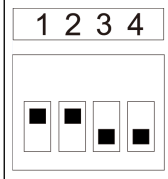
5	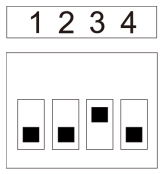	6	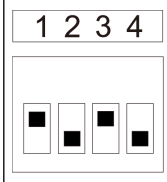	7	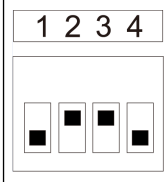	8	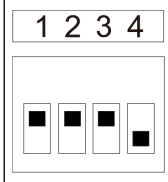
9	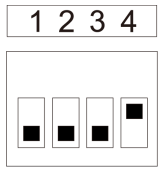	10	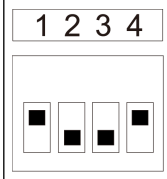	11	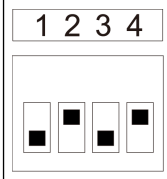	12	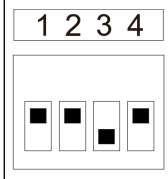
13	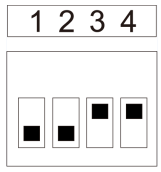	14	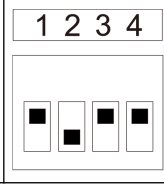	15	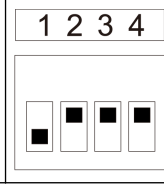	16	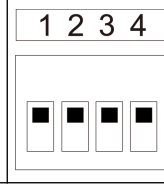

Indicator

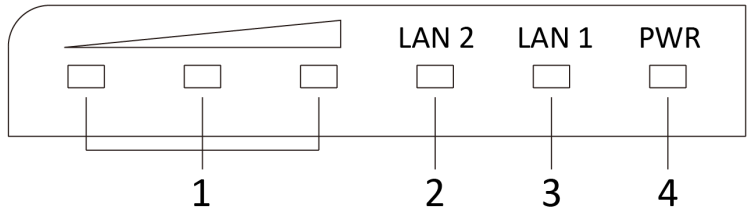

Figure 3-78 Device Indicator

Table 3-35 Device Indicator Description

No.	Indicator	Description	
1	Signal Strength Indicator	Solid on	The devices are matched.

No.	Indicator	Description	
			• Solid red, yellow, and green: The wireless signal is strong. • Solid red and yellow, unlit green: The wireless signal is normal. • Solid red, unlit yellow and green: The wireless signal is weak. Please adjust the position and direction of the device.
		Unlit	The devices are not matched.
2/3	LAN 2/LAN Indicator	Solid Green	The port is connected.
		Flashing Green	The port is transmitting data. The faster the indicator flashes, the greater the transmission rate is.
		Unlit	The port is disconnected or connection is abnormal.
4	Power Indicator	Solid Green	The device is powered on normally
		Unlit	No power supply connected or power supply is abnormal.

Application Scene

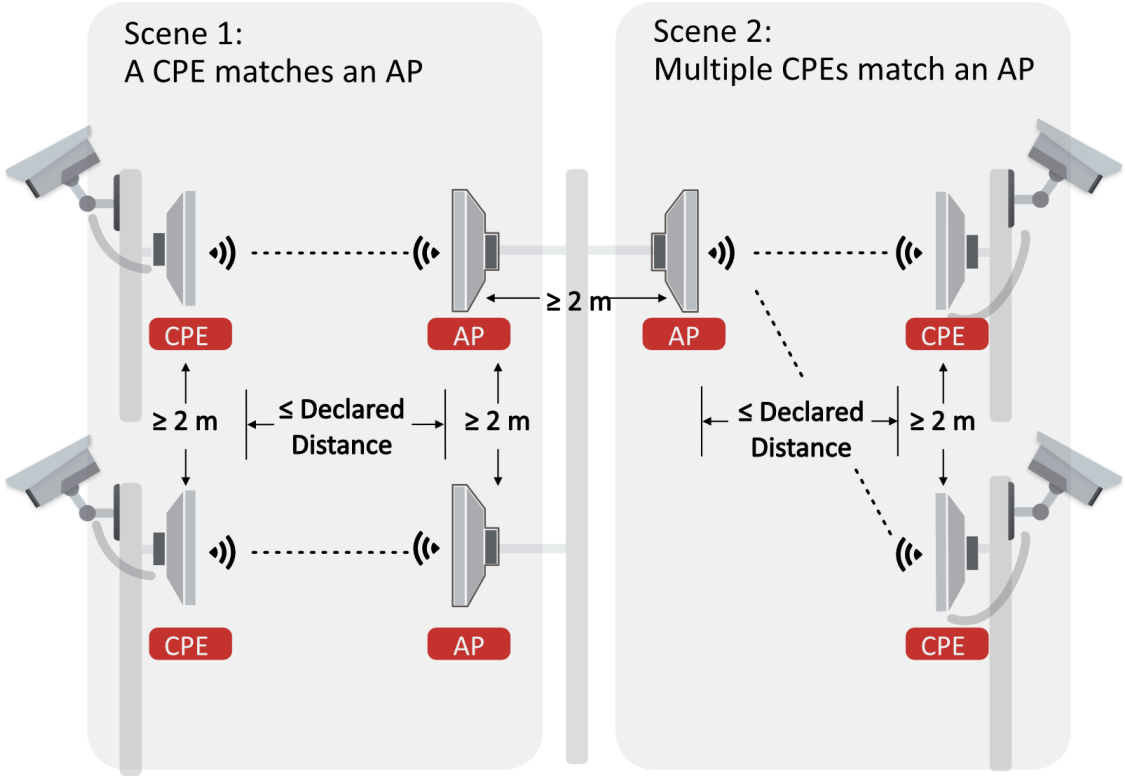

Figure 3-79 Application Scene

Preparation for Installation

To avoid device damage or personal injury caused by improper usage of the device, please follow the preparations below.

- Use the attached power adapter and PoE injector to power the device.
- The distance between AP and CPE should be less than 5 km to secure transmission rate.
- At least 2 m distance should be kept between two adjacent devices.
- The devices should be installed face to face and the max. angle of deviation is 30°.
- Install the device in the place where the maintenance personnel can operate easily.
- Make sure the device is installed vertically in forward direction, while not horizontally or in reverse direction.
- Make sure the water-proof cover is installed.
- Protect the power adapter and PoE injector from rain. It is suggested to put them into a waterproof case or keep them in a dry place.
- It is suggested to manage the gap between cover and device with fluid dispensing.
- Disconnect the power supply when you have the device serviced.
- The temperature of the cover area will be high when the device is working. In the circumstances, only personnel with relevant professional knowledge, such as installation and maintenance personnel, are allowed to operate the device.

Pole Installation

Mount the device on the pole with a diameter of 40 to 100 mm using the attached cable tie. Please read and follow the steps:

1. Thread the cable ties into the installation holes at the back of the device.

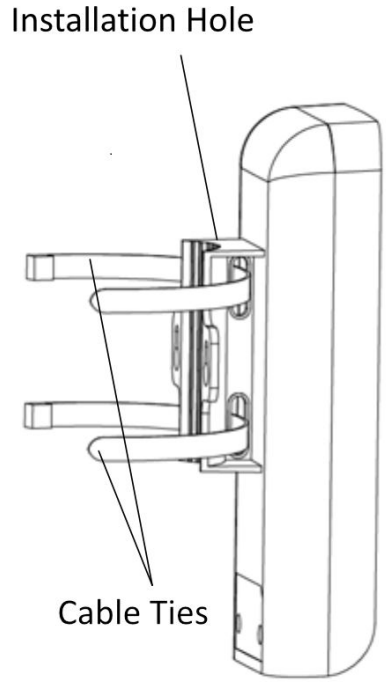

Figure 3-80 Thread Cable Ties

2. Fix and fasten the cable ties on the pole.

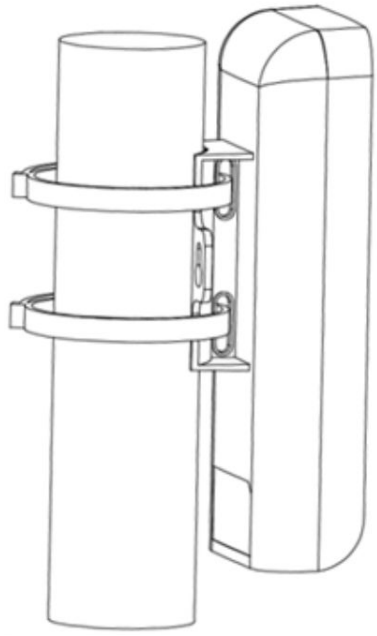

Figure 3-81 Fix Device

Note

Adjust the direction of the device manually to keep the device installed vertically.

Device Connection

Based on the actual situations, connect the device according to the following wiring steps.

Note

- Use the attached PoE injector and power adaptor to power on the device.
- The PoE injector must be connected to an earthed socket outlet.
- The SSIDs of APs in the same direction cannot be the same to avoid matching failure.

1. **AP connection:**
   a. Switch the CPE/AP DIP to set the device as AP.
   b. Set SSID (Select SSID NO. 1 for example).
   c. Power on the AP device by the PoE injector.

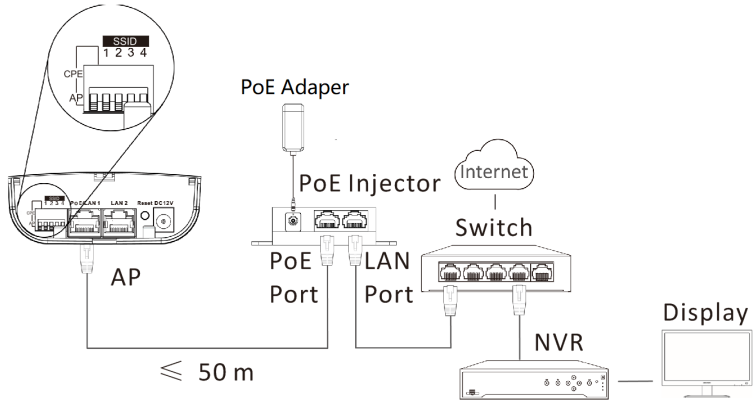

Figure 3-82 AP Connection

2. **CPE connection:**
   a. Switch the CPE/AP DIP to set the device as CPE.
   b. Select the SSID No. set on the AP to match (Select SSID NO. 1 for example).
   c. CPE device can supply power to IPC.
   d. Optional: If there are more than one CPE (no more than 4) to be matched with one AP, repeat the previous steps connect and set the CPEs.

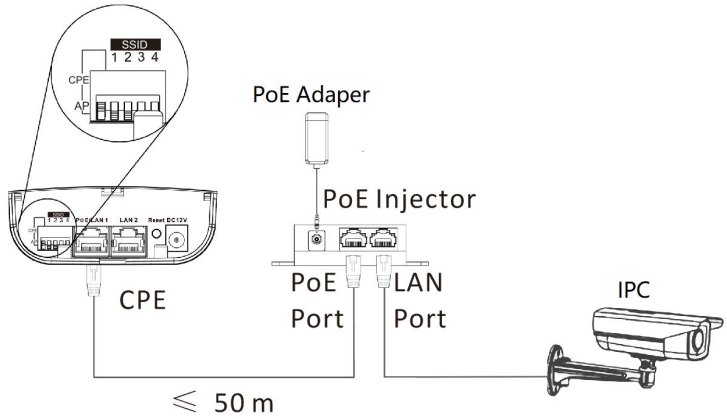

Figure 3-83 CPE Connection

3. After you finish the device connection, check device working status, network connection, and signal strength according to indicators.

3.5.3 DS-3WF02C-5AC/O V2

The 5 GHz wireless bridge (hereinafter referred to as *the device*) is used for wireless transmission within 5 km. It supports 16 sets of SSID, achieving point-to-point and point-to-multipoint transmission, which can guarantee the multi-channel HD video transmission for outdoor video security.

Packing List

Please check if there is any damage of the package first. According to the packing list, make sure no item is lost. After checking all the items included, you can continue to install the device.

Table 3-36 Packing List

Item	Appearance	Quantity
Wireless Bridge	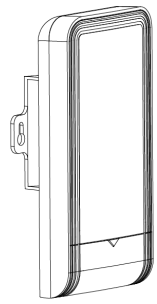	× 1
PoE Injector	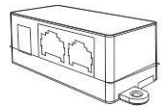	× 1
Power Adapter	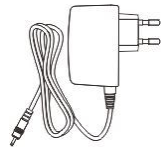	× 1
Cable Tie		× 2
Quick Start Guide	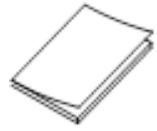	× 1
Regulatory Compliance and Safety Information	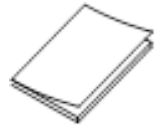	× 1

Note

The device image used here is only for example purpose. The actual device may vary with models.

Interface/Button

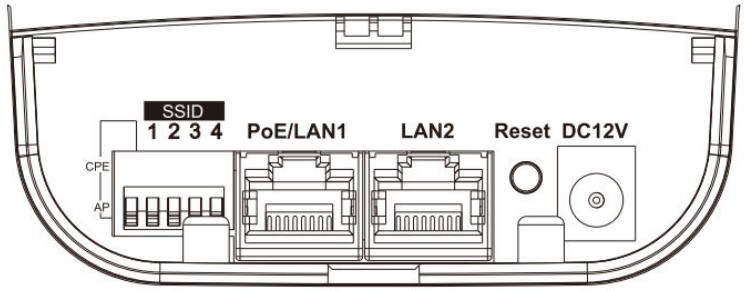

Figure 3-84 Device Interface/Button

Table 3-37 Device Interface/Button Description

Interface/Button	Description
CPE/AP DIP Switch	Switch up or down to set the device as AP or CPE.
SSID	Switch up or down to set a 4-character SSID. CPE and AP will match when their SSIDs are the same. **Note** The AP's SSID should be unique.
PoE IN/LAN 1	The 10/100/1000 Mbps adaptive RJ45 port, also can be used as a PoE port.
LAN 2	The 10/100/1000 Mbps adaptive RJ45 port.
DC 12V	Support DC 12 power supply. **Note** If the PoE injector is not used for powering on the device, you can use the attached power adapter to connect the device to socket.
Reset	Long press for 4 seconds to restore to factory settings.

SSID

4-character SSID can realize 16 sets of matching ways by switching the DIP up or down.

Note

Please switch the CPE/AP DIP Switch to set which scene the device is used as before setting the SSID.

Table 3-38 SSID No. Introduction

No.	DIP	No.	DIP	No.	DIP	No.	DIP
1	1 2 3 4	2	1 2 3 4	3	1 2 3 4	4	1 2 3 4
5	1 2 3 4	6	1 2 3 4	7	1 2 3 4	8	1 2 3 4
9	1 2 3 4	10	1 2 3 4	11	1 2 3 4	12	1 2 3 4
13	1 2 3 4	14	1 2 3 4	15	1 2 3 4	16	1 2 3 4

Indicator

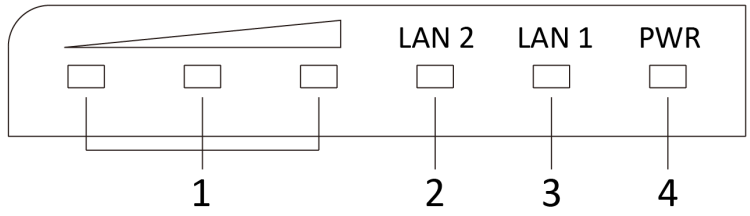

Figure 3-85 Device Indicator

Table 3-39 Device Indicator Description

No.	Indicator	Description	
1	Signal Strength Indicator	Solid on	The devices are matched. • Solid red, yellow, and green: The wireless signal is strong. • Solid red and yellow, unlit green: The wireless signal is normal. • Solid red, unlit yellow and green: The wireless signal is weak. Please adjust the position and direction of the device.
		Unlit	The devices are not matched.
2/3	LAN 2/LAN Indicator	Solid Green	The port is connected.
		Flashing Green	The port is transmitting data. The faster the indicator flashes, the greater the transmission rate is.
		Unlit	The port is disconnected or connection is abnormal.
4	Power Indicator	Solid Green	The device is powered on normally
		Unlit	No power supply connected or power supply is abnormal.

Application Scene

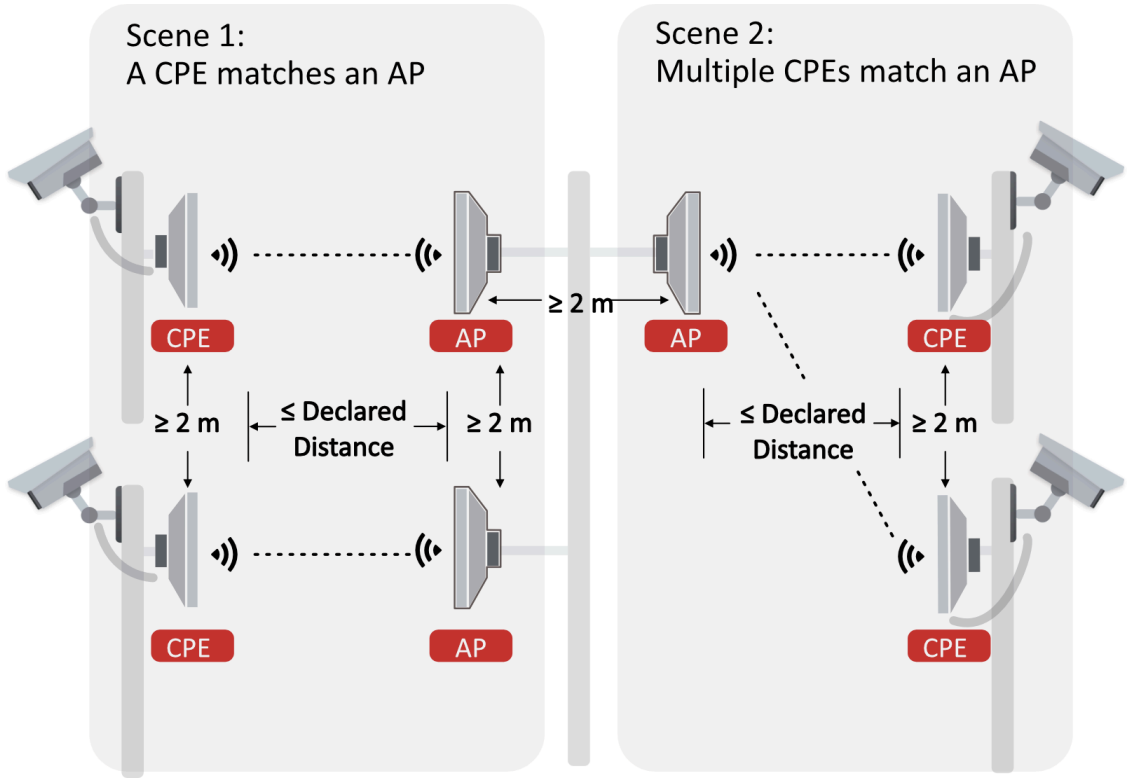

Figure 3-86 Application Scene

Preparation for Installation

To avoid device damage or personal injury caused by improper usage of the device, please follow the preparations below.

- Use the attached power adapter and PoE injector to power the device.
- The distance between AP and CPE should be less than 5 km to secure transmission rate.
- At least 2 m distance should be kept between two adjacent devices.
- The devices should be installed face to face and the max. angle of deviation is 30°.
- Install the device in the place where the maintenance personnel can operate easily.
- Make sure the device is installed vertically in forward direction, while not horizontally or in reverse direction.
- Make sure the water-proof cover is installed.
- Protect the power adapter and PoE injector from rain. It is suggested to put them into a waterproof case or keep them in a dry place.
- It is suggested to manage the gap between cover and device with fluid dispensing.
- Disconnect the power supply when you have the device serviced.
- The temperature of the cover area will be high when the device is working. In the circumstances, only personnel with relevant professional knowledge, such as installation and maintenance personnel, are allowed to operate the device.

Pole Installation

Mount the device on the pole with a diameter of 40 to 100 mm using the attached cable tie. Please read and follow the steps:

1. Thread the cable ties into the installation holes at the back of the device.

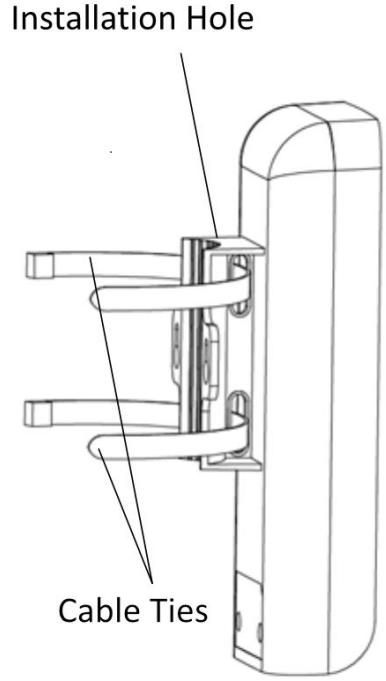

Figure 3-87 Thread Cable Ties

2. Fix and fasten the cable ties on the pole.

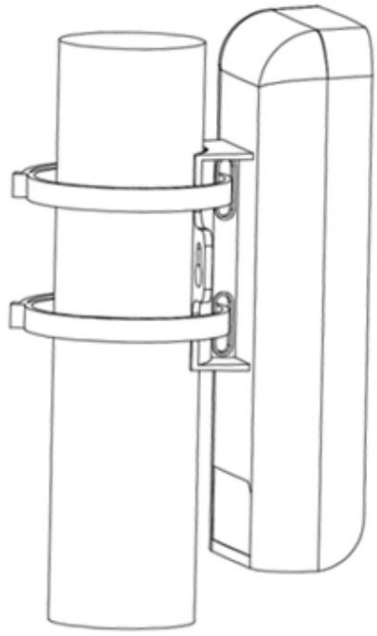

Figure 3-88 Fix Device

Note

Adjust the direction of the device manually to keep the device installed vertically.

Device Connection

Based on the actual situations, connect the device according to the following wiring steps.

Note

- Use the attached PoE injector and power adaptor to power on the device.
- The PoE injector must be connected to an earthed socket outlet.
- The SSIDs of APs in the same direction cannot be the same to avoid matching failure.

1. **AP connection:**
   a. Switch the CPE/AP DIP to set the device as AP.
   b. Set SSID (Select SSID NO. 1 for example).
   c. Power on the AP device by the PoE injector.

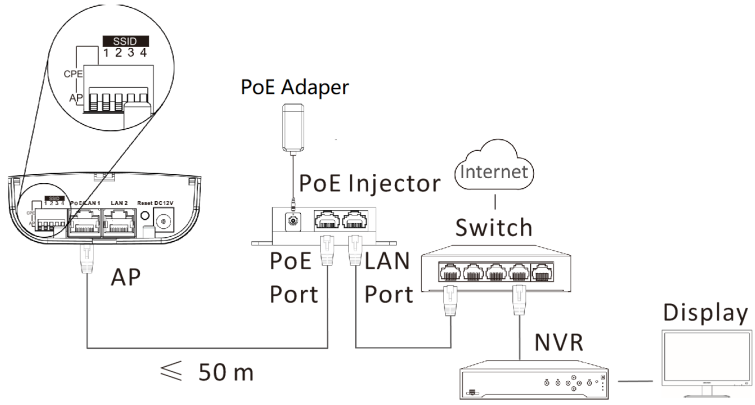

Figure 3-89 AP Connection

2. **CPE connection:**
   a. Switch the CPE/AP DIP to set the device as CPE.
   b. Select the SSID No. set on the AP to match (Select SSID NO. 1 for example).
   c. CPE device can supply power to IPC.
   d. Optional: If there are more than one CPE (no more than 4) to be matched with one AP, repeat the previous steps connect and set the CPEs.

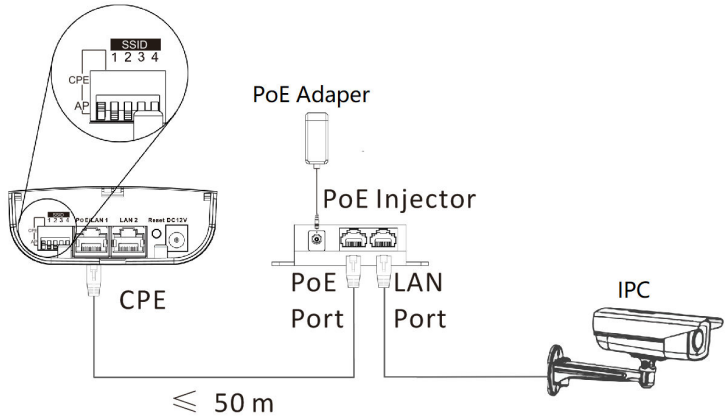

Figure 3-90 CPE Connection

3. After you finish the device connection, check device working status, network connection, and signal strength according to indicators.

3.5.4 DS-3WF02C-5AC/O V3

The 5 GHz wireless bridge (hereinafter referred to as *the device*) is used for wireless transmission within 5 km. It supports point-to-point and point-to-multipoint transmission, which can guarantee the multi-channel HD video transmission for outdoor video security.

Packing List

Please check if there is any damage of the package first. According to the packing list, make sure no item is lost. After checking all the items included, you can continue to install the device.

Table 3-40 Packing List

Item	Appearance	Quantity
Wireless Bridge	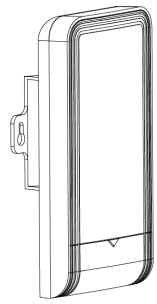	× 1
PoE Injector	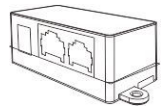	× 1
Power Adapter	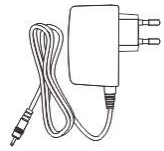	× 1
Cable Tie		× 2
Quick Start Guide	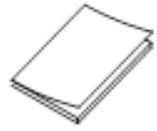	× 1
Regulatory Compliance and Safety Information	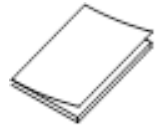	× 1

Note

The device image used here is only for example purpose. The actual device may vary with models.

Interface/Button

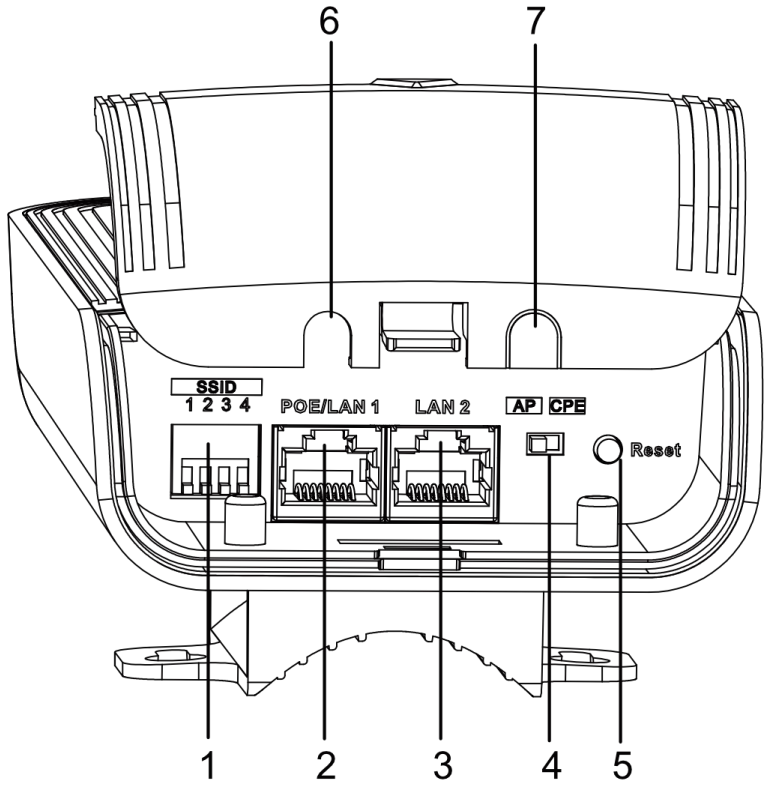

Figure 3-91 Device Interface/Button

Table 3-41 Device Interface/Button Description

No.	Interface/Button	Description
1	SSID	Switch up or down to set a 4-character SSID. CPE and AP will match when their SSIDs are the same. **Note** The AP's SSID should be unique.
2	PoE/LAN 1	The 10/100/1000 Mbps adaptive RJ45 port, also can be used as a PoE port.
3	LAN 2	The 10/100/1000 Mbps adaptive RJ45 port.

No.	Interface/Button	Description
4	CPE/AP DIP Switch	Switch left or right to set the device as AP or CPE.
5	Reset	Long press for 4 seconds to restore to factory settings.
6/7	Network Cable Slot	Reserved for easy placement of the network cables.

SSID

4-character SSID can realize 16 sets of matching ways by switching the DIP up or down.

Note

Please switch the CPE/AP DIP Switch to set which scene the device is used as before setting the SSID.

Table 3-42 SSID No. Introduction

No.	DIP	No.	DIP	No.	DIP	No.	DIP
1	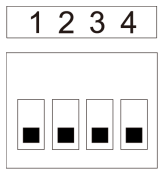	2	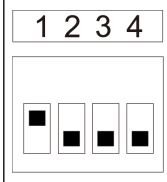	3	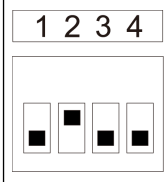	4	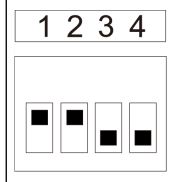
5	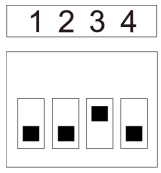	6	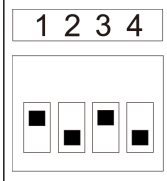	7	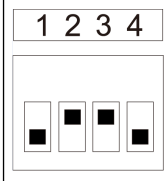	8	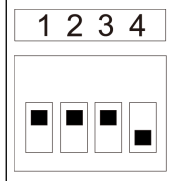
9	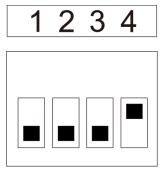	10	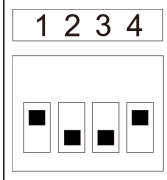	11	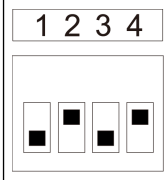	12	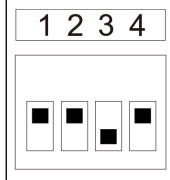
13	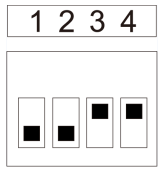	14	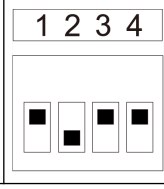	15	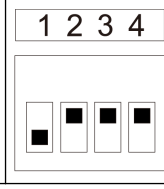	16	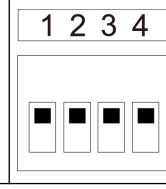

Indicator

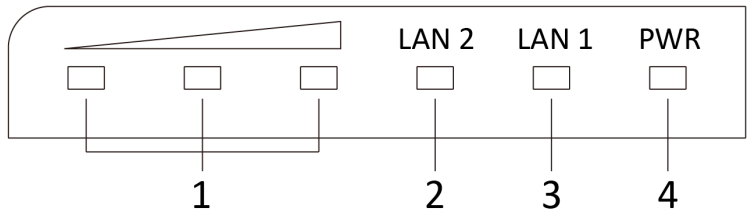

Figure 3-92 Device Indicator

Table 3-43 Device Indicator Description

No.	Indicator	Description	
1	Signal Strength Indicator	Solid on	The devices are matched. • Solid red, yellow, and green: The wireless signal is strong. • Solid red and yellow, unlit green: The wireless signal is normal. • Solid red, unlit yellow and green: The wireless signal is weak. Please adjust the position and direction of the device.
		Unlit	The devices are not matched.
2/3	LAN 2/LAN Indicator	Solid Green	The port is connected.
		Flashing Green	The port is transmitting data. The faster the indicator flashes, the greater the transmission rate is.
		Unlit	The port is disconnected or connection is abnormal.
4	Power Indicator	Solid Green	The device is powered on normally
		Unlit	No power supply connected or power supply is abnormal.

Application Scene

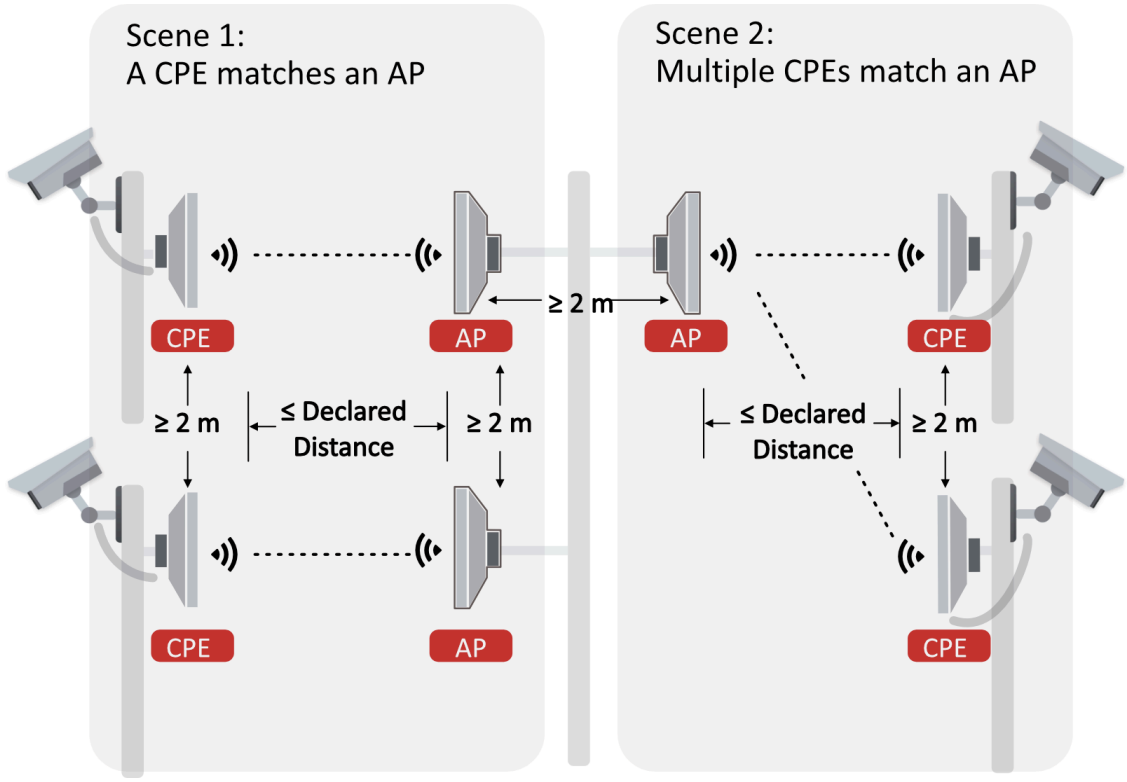

Figure 3-93 Application Scene

Preparation for Installation

To avoid device damage or personal injury caused by improper usage of the device, please follow the preparations below.

- Use the attached power adapter and PoE injector to power the device.
- The distance between AP and CPE should be less than 5 km to secure transmission rate.
- At least 2 m distance should be kept between two adjacent devices.
- The devices should be installed face to face and the max. angle of deviation is 30°.
- Install the device in the place where the maintenance personnel can operate easily.
- Make sure the device is installed vertically in forward direction, while not horizontally or in reverse direction.
- Make sure the water-proof cover is installed.
- Protect the power adapter and PoE injector from rain. It is suggested to put them into a waterproof case or keep them in a dry place.
- It is suggested to manage the gap between cover and device with fluid dispensing.
- Disconnect the power supply when you have the device serviced.
- The temperature of the cover area will be high when the device is working. In the circumstances, only personnel with relevant professional knowledge, such as installation and maintenance personnel, are allowed to operate the device.

Pole Installation

Mount the device on the pole with a diameter of 40 to 100 mm using the attached cable tie. Please read and follow the steps:

1. Thread the cable ties into the installation holes at the back of the device.

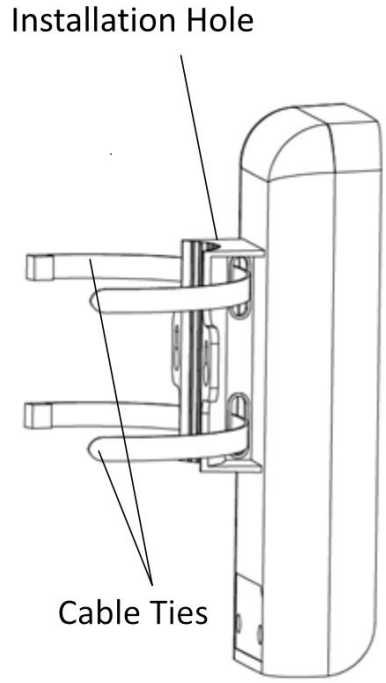

Figure 3-94 Thread Cable Ties

2. Fix and fasten the cable ties on the pole.

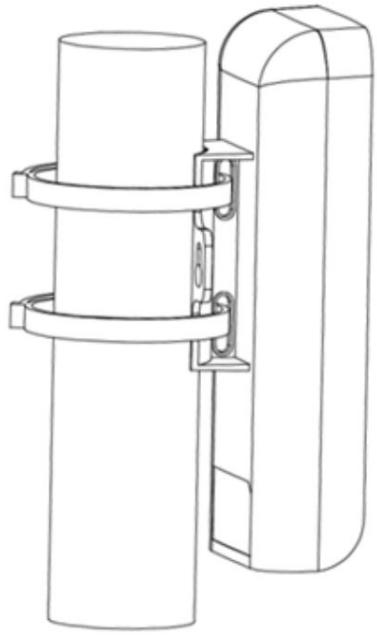

Figure 3-95 Fix Device

Note

Adjust the direction of the device manually to keep the device installed vertically.

Device Connection

Based on the actual situations, connect the device according to the following wiring steps.

Note

- Use the attached PoE injector and power adapter to power on the device.
- The PoE injector must be connected to an earthed socket outlet.
- The SSIDs of APs installed in the same direction cannot be the same to avoid matching failure.

1. **AP connection:**
   a. Switch the CPE/AP DIP to set the device as AP.
   b. Set SSID (Set SSID NO. 1 for example).
   c. Power on the AP device by the PoE injector.

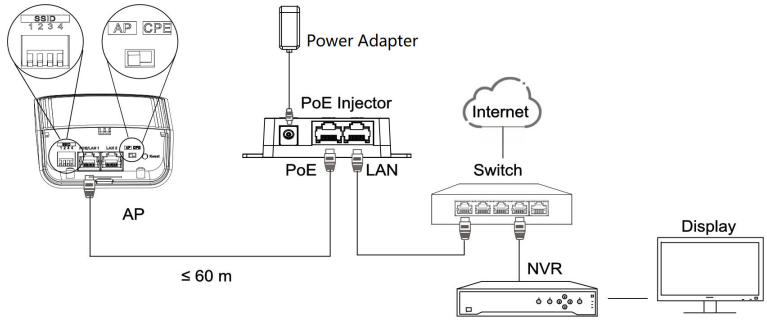

Figure 3-96 AP Connection

2. **CPE connection:**
   a. Switch the CPE/AP DIP to set the device as CPE.
   b. Select the SSID No. set on the AP to match (Select SSID NO. 1 for example).
   c. CPE device can supply power to IPC.
   d. Optional: If there are more than one CPE (no more than 4) to be matched with one AP, repeat the previous steps connect and set the CPEs.

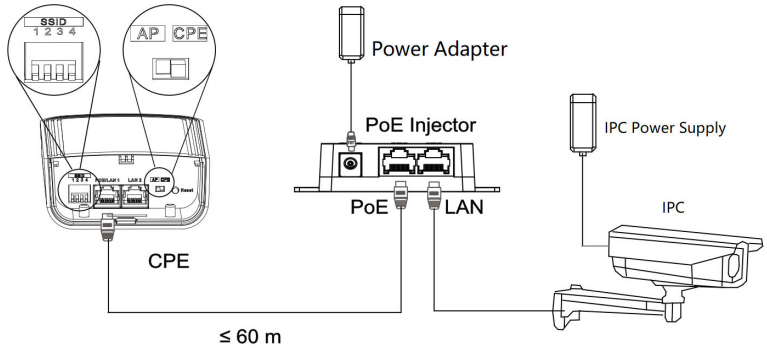

Figure 3-97 CPE Connection

3. After you finish the device connection, check device working status, network connection, and signal strength according to indicators.

3.6 5GHz 15 km

3.6.1 DS-3WF03C-5AC/O

The 5 GHz wireless bridge (hereinafter referred to as *the device*) is used for wireless transmission within 15 km. It supports 16 sets of SSID, achieving point-to-point and point-to-multipoint transmission, which can guarantee the multi-channel HD video transmission for outdoor video security.

Packing List

Please check if there is any damage of the package first. According to the packing list, make sure no item is lost. After checking all the items included, you can continue to install the device.

Table 3-44 Packing List

Item	Appearance	Quantity
Wireless Bridge	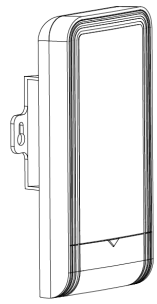	× 1
PoE Injector	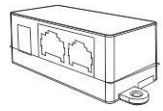	× 1
Power Adapter	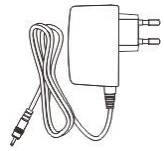	× 1
Cable Tie		× 2
Quick Start Guide	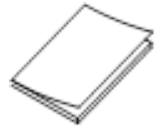	× 1
Regulatory Compliance and Safety Information	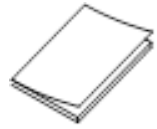	× 1

Note

The device image used here is only for example purpose. The actual device may vary with models.

Interface/Button

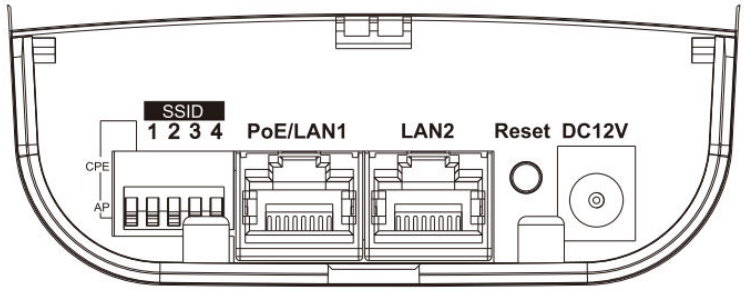

Figure 3-98 Device Interface/Button

Table 3-45 Device Interface/Button Description

Interface/Button	Description
CPE/AP DIP Switch	Switch up or down to set the device as AP or CPE.
SSID	Switch up or down to set a 4-character SSID. CPE and AP will match when their SSIDs are the same. **Note** The AP's SSID should be unique.
PoE IN/LAN 1	The 10/100/1000 Mbps adaptive RJ45 port, also can be used as a PoE port.
LAN 2	The 10/100/1000 Mbps adaptive RJ45 port.
DC 12V	Support DC 12 power supply. **Note** If the PoE injector is not used for powering on the device, you can use the attached power adapter to connect the device to socket.
Reset	Long press for 4 seconds to restore to factory settings.

SSID

4-character SSID can realize 16 sets of matching ways by switching the DIP up or down.

Note

Please switch the CPE/AP DIP Switch to set which scene the device is used as before setting the SSID.

Table 3-46 SSID No. Introduction

No.	DIP	No.	DIP	No.	DIP	No.	DIP
1	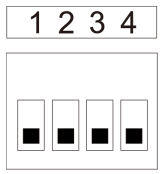	2	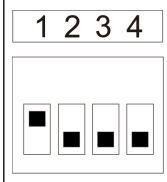	3	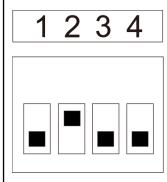	4	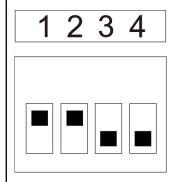
5	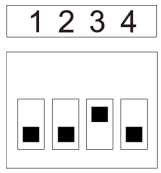	6	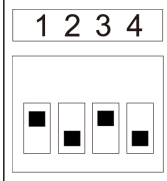	7	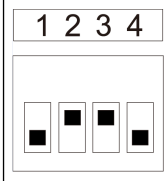	8	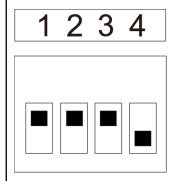
9	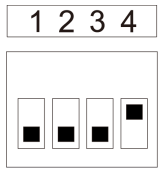	10	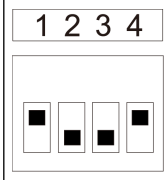	11	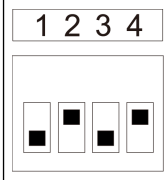	12	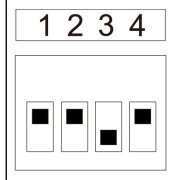
13	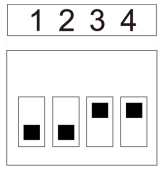	14	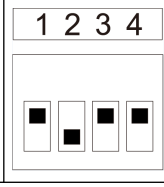	15	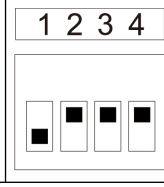	16	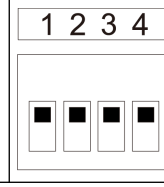

Indicator

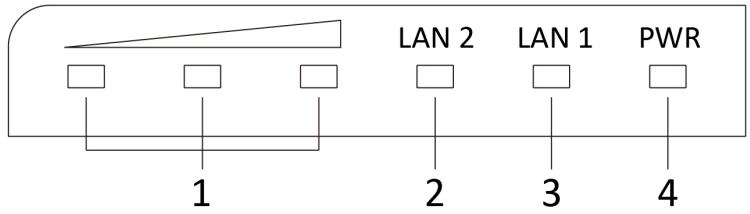

Figure 3-99 Device Indicator

Table 3-47 Device Indicator Description

No.	Indicator	Description	
1	Signal Strength Indicator	Solid on	The devices are matched. • Solid red, yellow, and green: The wireless signal is strong. • Solid red and yellow, unlit green: The wireless signal is normal. • Solid red, unlit yellow and green: The wireless signal is weak. Please adjust the position and direction of the device.
		Unlit	The devices are not matched.
2/3	LAN 2/LAN Indicator	Solid Green	The port is connected.
		Flashing Green	The port is transmitting data. The faster the indicator flashes, the greater the transmission rate is.
		Unlit	The port is disconnected or connection is abnormal.
4	Power Indicator	Solid Green	The device is powered on normally
		Unlit	No power supply connected or power supply is abnormal.

Application Scene

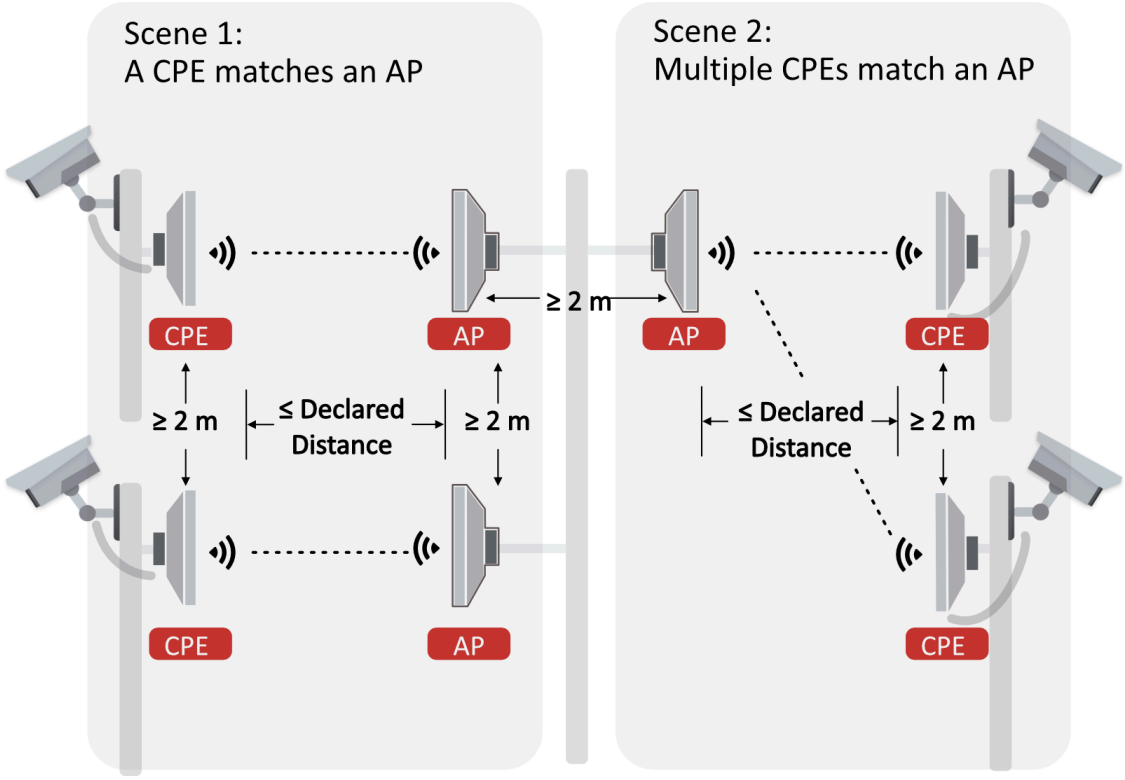

Figure 3-100 Application Scene

Preparation for Installation

To avoid device damage or personal injury caused by improper usage of the device, please follow the preparations below.

- Use the attached power adapter and PoE injector to power the device.
- The distance between AP and CPE should be less than 15 km to secure transmission rate.
- At least 2 m distance should be kept between two adjacent devices.
- The devices should be installed face to face and the max. angle of deviation is 30°.
- Install the device in the place where the maintenance personnel can operate easily.
- Make sure the device is installed vertically in forward direction, while not horizontally or in reverse direction.
- Make sure the water-proof cover is installed.
- Protect the power adapter and PoE injector from rain. It is suggested to put them into a waterproof case or keep them in a dry place.
- It is suggested to manage the gap between cover and device with fluid dispensing.
- Disconnect the power supply when you have the device serviced.
- The temperature of the cover area will be high when the device is working. In the circumstances, only personnel with relevant professional knowledge, such as installation and maintenance personnel, are allowed to operate the device.

Pole Installation

Mount the device on the pole with a diameter of 40 to 100 mm using the attached cable tie. Please read and follow the steps:

1. Thread the cable ties into the installation holes at the back of the device.

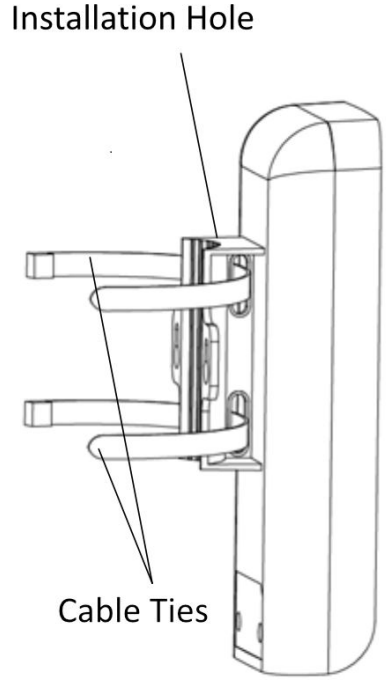

Figure 3-101 Thread Cable Ties

2. Fix and fasten the cable ties on the pole.

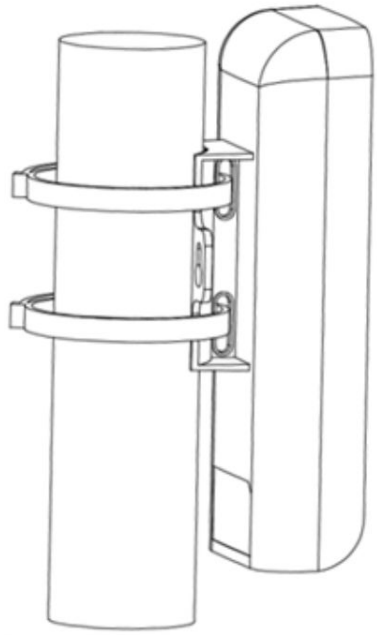

Figure 3-102 Fix Device

Note

Adjust the direction of the device manually to keep the device installed vertically.

Device Connection

Based on the actual situations, connect the device according to the following wiring steps.

Note

- Use the attached PoE injector and power adaptor to power on the device.
- The PoE injector must be connected to an earthed socket outlet.
- The SSIDs of APs in the same direction cannot be the same to avoid matching failure.

1. **AP connection:**
   a. Switch the CPE/AP DIP to set the device as AP.
   b. Set SSID (Select SSID NO. 1 for example).
   c. Power on the AP device by the PoE injector.

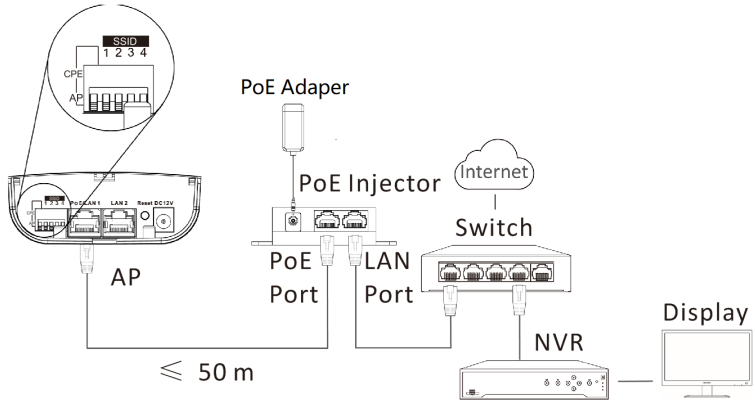

Figure 3-103 AP Connection

2. **CPE connection:**
   a. Switch the CPE/AP DIP to set the device as CPE.
   b. Select the SSID No. set on the AP to match (Select SSID NO. 1 for example).
   c. CPE device can supply power to IPC.
   d. Optional: If there are more than one CPE (no more than 4) to be matched with one AP, repeat the previous steps connect and set the CPEs.

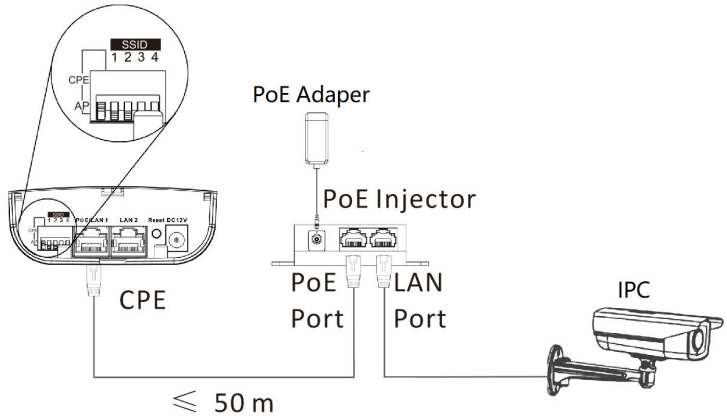

Figure 3-104 CPE Connection

3. After you finish the device connection, check device working status, network connection, and signal strength according to indicators.

3.6.2 DS-3WF03C-5AC/O V2

The 5 GHz wireless bridge (hereinafter referred to as *the device*) is used for wireless transmission within 15 km. It supports 16 sets of SSID, achieving point-to-point and point-to-multipoint transmission, which can guarantee the multi-channel HD video transmission for outdoor video security.

Packing List

Please check if there is any damage of the package first. According to the packing list, make sure no item is lost. After checking all the items included, you can continue to install the device.

Table 3-48 Packing List

Item	Appearance	Quantity
Wireless Bridge	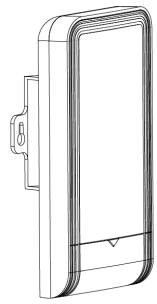	× 1
PoE Injector	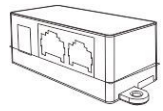	× 1
Power Adapter	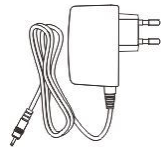	× 1
Cable Tie		× 2
Quick Start Guide	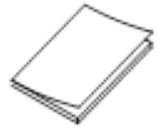	× 1
Regulatory Compliance and Safety Information	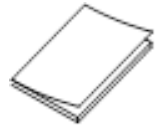	× 1

Note

The device image used here is only for example purpose. The actual device may vary with models.

Interface/Button

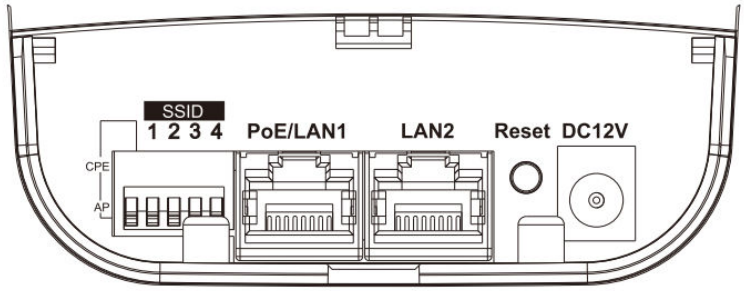

Figure 3-105 Device Interface/Button

Table 3-49 Device Interface/Button Description

Interface/Button	Description
CPE/AP DIP Switch	Switch up or down to set the device as AP or CPE.
SSID	Switch up or down to set a 4-character SSID. CPE and AP will match when their SSIDs are the same. **Note** The AP's SSID should be unique.
PoE IN/LAN 1	The 10/100/1000 Mbps adaptive RJ45 port, also can be used as a PoE port.
LAN 2	The 10/100/1000 Mbps adaptive RJ45 port.
DC 12V	Support DC 12 power supply. **Note** If the PoE injector is not used for powering on the device, you can use the attached power adapter to connect the device to socket.
Reset	Long press for 4 seconds to restore to factory settings.

SSID

4-character SSID can realize 16 sets of matching ways by switching the DIP up or down.

Note

Please switch the CPE/AP DIP Switch to set which scene the device is used as before setting the SSID.

Table 3-50 SSID No. Introduction

No.	DIP	No.	DIP	No.	DIP	No.	DIP
1	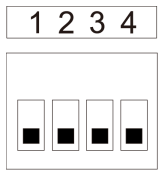	2	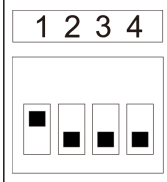	3	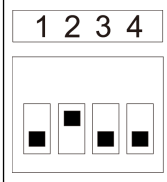	4	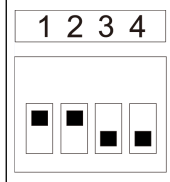
5	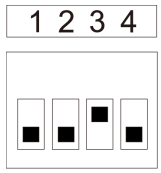	6	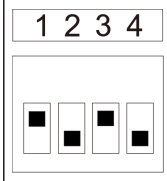	7	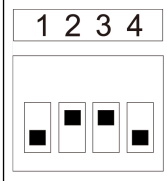	8	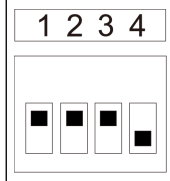
9	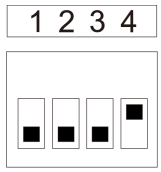	10	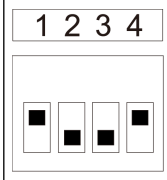	11	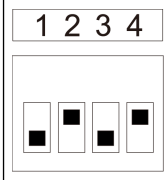	12	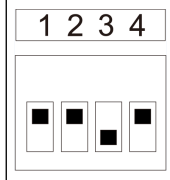
13	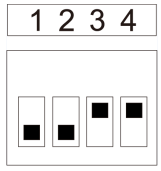	14	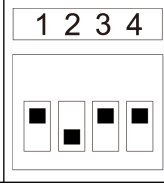	15	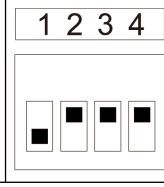	16	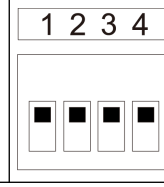

Indicator

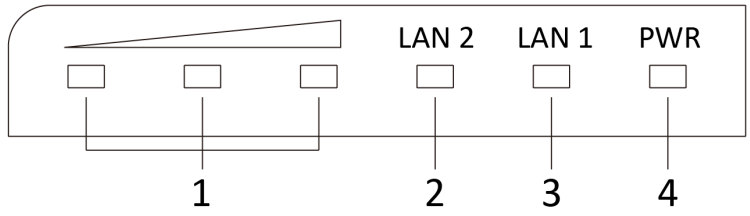

Figure 3-106 Device Indicator

Table 3-51 Device Indicator Description

No.	Indicator	Description	
1	Signal Strength Indicator	Solid on	The devices are matched. • Solid red, yellow, and green: The wireless signal is strong. • Solid red and yellow, unlit green: The wireless signal is normal. • Solid red, unlit yellow and green: The wireless signal is weak. Please adjust the position and direction of the device.
		Unlit	The devices are not matched.
2/3	LAN 2/LAN Indicator	Solid Green	The port is connected.
		Flashing Green	The port is transmitting data. The faster the indicator flashes, the greater the transmission rate is.
		Unlit	The port is disconnected or connection is abnormal.
4	Power Indicator	Solid Green	The device is powered on normally
		Unlit	No power supply connected or power supply is abnormal.

Application Scene

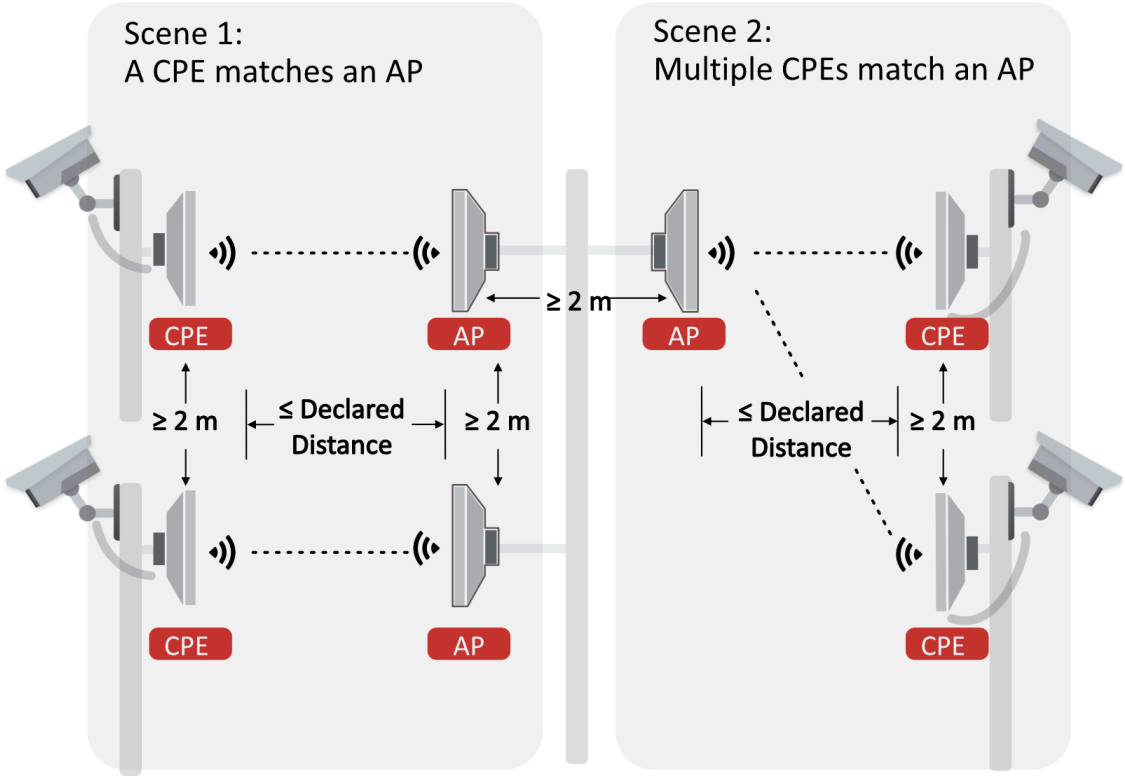

Figure 3-107 Application Scene

Preparation for Installation

To avoid device damage or personal injury caused by improper usage of the device, please follow the preparations below.

- Use the attached power adapter and PoE injector to power the device.
- The distance between AP and CPE should be less than 15 km to secure transmission rate.
- At least 2 m distance should be kept between two adjacent devices.
- The devices should be installed face to face and the max. angle of deviation is 30°.
- Install the device in the place where the maintenance personnel can operate easily.
- Make sure the device is installed vertically in forward direction, while not horizontally or in reverse direction.
- Make sure the water-proof cover is installed.
- Protect the power adapter and PoE injector from rain. It is suggested to put them into a waterproof case or keep them in a dry place.
- It is suggested to manage the gap between cover and device with fluid dispensing.
- Disconnect the power supply when you have the device serviced.
- The temperature of the cover area will be high when the device is working. In the circumstances, only personnel with relevant professional knowledge, such as installation and maintenance personnel, are allowed to operate the device.

Pole Installation

Mount the device on the pole with a diameter of 40 to 100 mm using the attached cable tie. Please read and follow the steps:

1. Thread the cable ties into the installation holes at the back of the device.

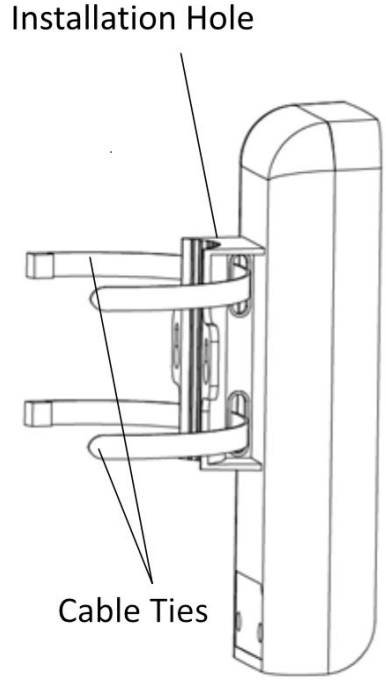

Figure 3-108 Thread Cable Ties

2. Fix and fasten the cable ties on the pole.

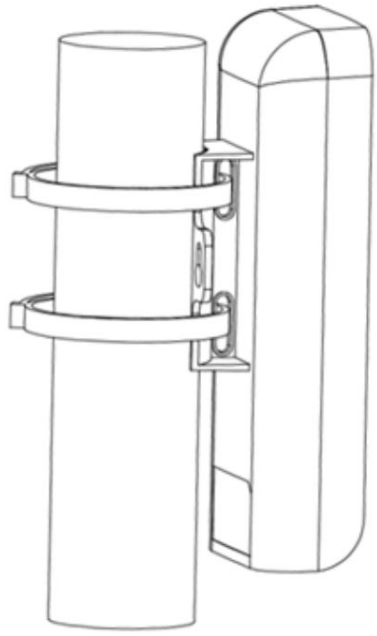

Figure 3-109 Fix Device

Note

Adjust the direction of the device manually to keep the device installed vertically.

Device Connection

Based on the actual situations, connect the device according to the following wiring steps.

Note

- Use the attached PoE injector and power adaptor to power on the device.
- The PoE injector must be connected to an earthed socket outlet.
- The SSIDs of APs in the same direction cannot be the same to avoid matching failure.

1. **AP connection:**
   a. Switch the CPE/AP DIP to set the device as AP.
   b. Set SSID (Select SSID NO. 1 for example).
   c. Power on the AP device by the PoE injector.

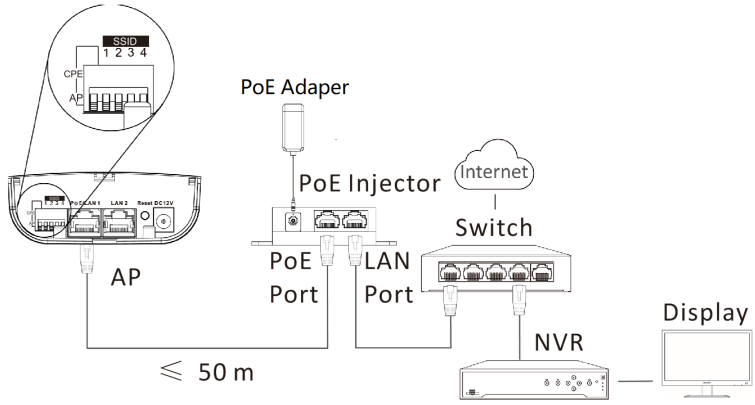

Figure 3-110 AP Connection

2. **CPE connection:**
   a. Switch the CPE/AP DIP to set the device as CPE.
   b. Select the SSID No. set on the AP to match (Select SSID NO. 1 for example).
   c. CPE device can supply power to IPC.
   d. Optional: If there are more than one CPE (no more than 4) to be matched with one AP, repeat the previous steps connect and set the CPEs.

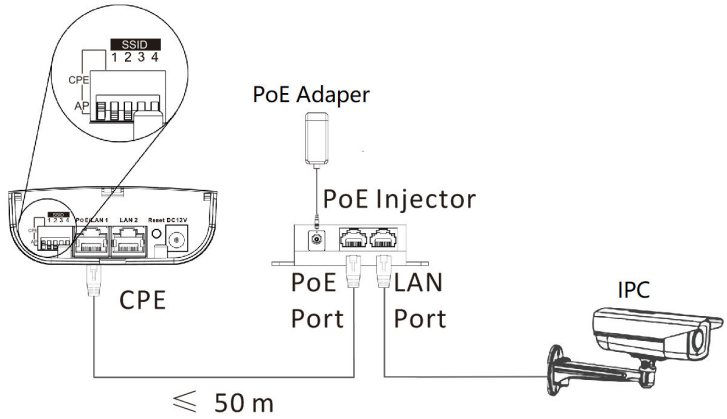

Figure 3-111 CPE Connection

3. After you finish the device connection, check device working status, network connection, and signal strength according to indicators.

3.6.3 DS-3WF03C-5AC/O V3

The 5 GHz wireless bridge (hereinafter referred to as *the device*) is used for wireless transmission within 15 km. It supports point-to-point and point-to-multipoint transmission, which can guarantee the multi-channel HD video transmission for outdoor video security.

Packing List

Please check if there is any damage of the package first. According to the packing list, make sure no item is lost. After checking all the items included, you can continue to install the device.

Table 3-52 Packing List

Item	Appearance	Quantity
Wireless Bridge	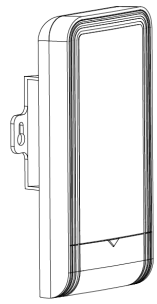	× 1
PoE Injector	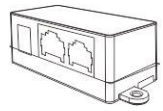	× 1
Power Adapter	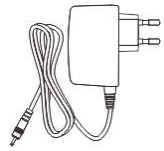	× 1
Cable Tie		× 2
Quick Start Guide	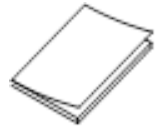	× 1
Regulatory Compliance and Safety Information	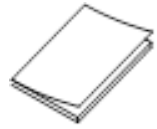	× 1

Note

The device image used here is only for example purpose. The actual device may vary with models.

Interface/Button

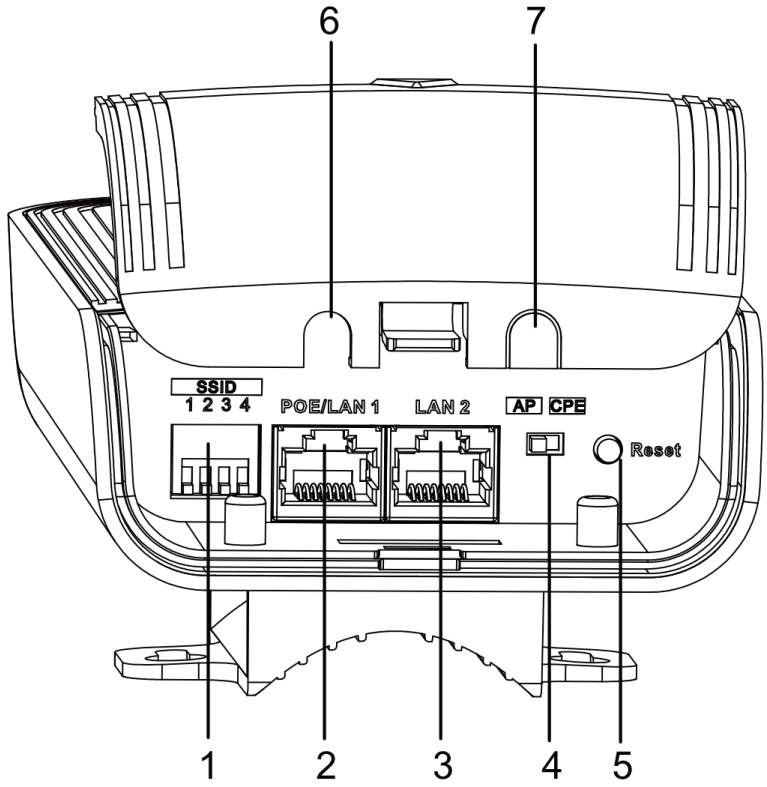

Figure 3-112 Device Interface/Button

Table 3-53 Device Interface/Button Description

No.	Interface/Button	Description
1	SSID	Switch up or down to set a 4-character SSID. CPE and AP will match when their SSIDs are the same. **Note** The AP's SSID should be unique.
2	PoE/LAN 1	The 10/100/1000 Mbps adaptive RJ45 port, also can be used as a PoE port.
3	LAN 2	The 10/100/1000 Mbps adaptive RJ45 port.

No.	Interface/Button	Description
4	CPE/AP DIP Switch	Switch left or right to set the device as AP or CPE.
5	Reset	Long press for 4 seconds to restore to factory settings.
6/7	Network Cable Slot	Reserved for easy placement of the network cables.

SSID

4-character SSID can realize 16 sets of matching ways by switching the DIP up or down.

Note

Please switch the CPE/AP DIP Switch to set which scene the device is used as before setting the SSID.

Table 3-54 SSID No. Introduction

No.	DIP	No.	DIP	No.	DIP	No.	DIP
1	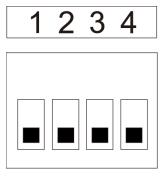	2	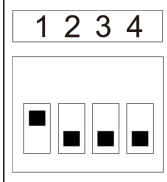	3	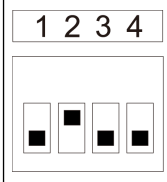	4	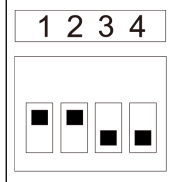
5	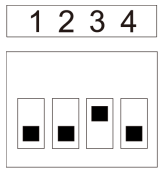	6	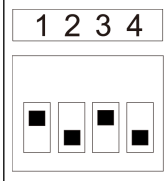	7	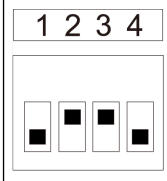	8	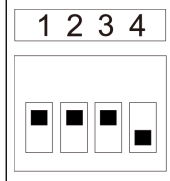
9	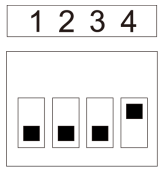	10	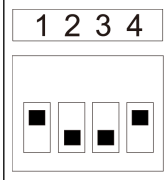	11	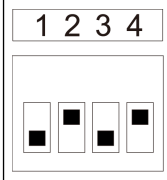	12	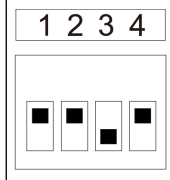
13	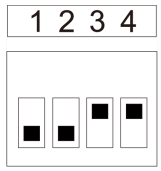	14	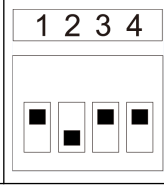	15	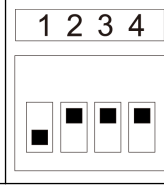	16	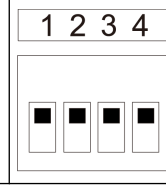

Indicator

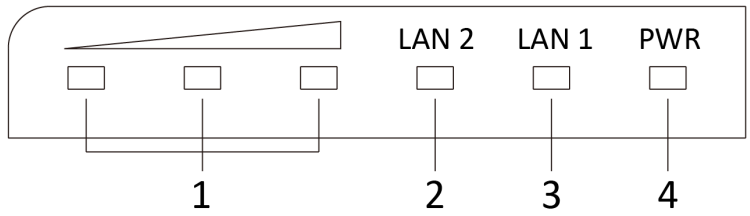

Figure 3-113 Device Indicator

Table 3-55 Device Indicator Description

No.	Indicator	Description	
1	Signal Strength Indicator	Solid on	The devices are matched. • Solid red, yellow, and green: The wireless signal is strong. • Solid red and yellow, unlit green: The wireless signal is normal. • Solid red, unlit yellow and green: The wireless signal is weak. Please adjust the position and direction of the device.
		Unlit	The devices are not matched.
2/3	LAN 2/LAN Indicator	Solid Green	The port is connected.
		Flashing Green	The port is transmitting data. The faster the indicator flashes, the greater the transmission rate is.
		Unlit	The port is disconnected or connection is abnormal.
4	Power Indicator	Solid Green	The device is powered on normally
		Unlit	No power supply connected or power supply is abnormal.

Application Scene

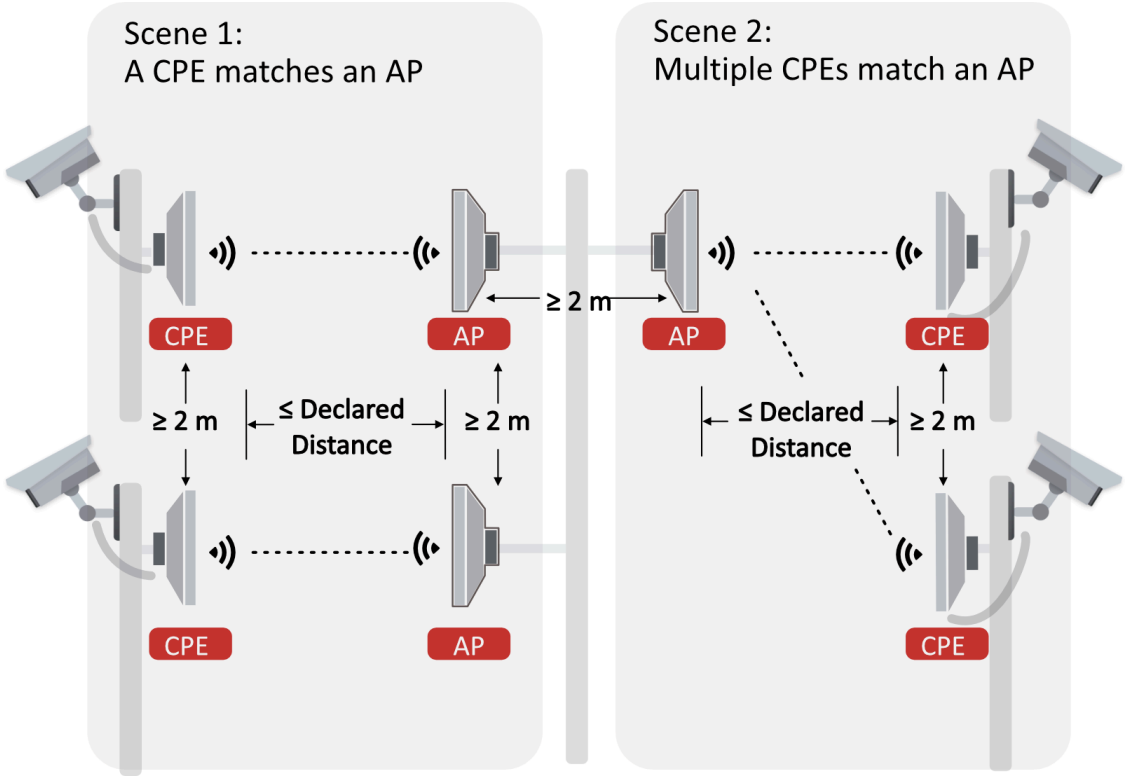

Figure 3-114 Application Scene

Preparation for Installation

To avoid device damage or personal injury caused by improper usage of the device, please follow the preparations below.

- Use the attached power adapter and PoE injector to power the device.
- The distance between AP and CPE should be less than 15 km to secure transmission rate.
- At least 2 m distance should be kept between two adjacent devices.
- The devices should be installed face to face and the max. angle of deviation is 30°.
- Install the device in the place where the maintenance personnel can operate easily.
- Make sure the device is installed vertically in forward direction, while not horizontally or in reverse direction.
- Make sure the water-proof cover is installed.
- Protect the power adapter and PoE injector from rain. It is suggested to put them into a waterproof case or keep them in a dry place.
- It is suggested to manage the gap between cover and device with fluid dispensing.
- Disconnect the power supply when you have the device serviced.
- The temperature of the cover area will be high when the device is working. In the circumstances, only personnel with relevant professional knowledge, such as installation and maintenance personnel, are allowed to operate the device.

Pole Installation

Mount the device on the pole with a diameter of 40 to 100 mm using the attached cable tie. Please read and follow the steps:

1. Thread the cable ties into the installation holes at the back of the device.

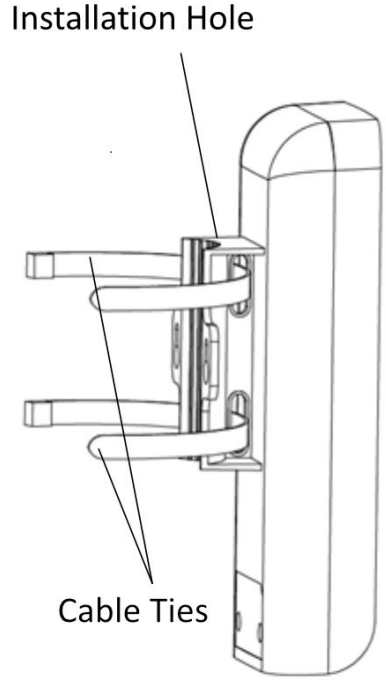

Figure 3-115 Thread Cable Ties

2. Fix and fasten the cable ties on the pole.

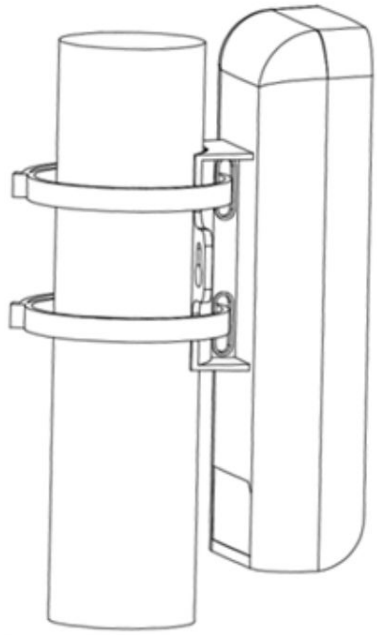

Figure 3-116 Fix Device

Note

Adjust the direction of the device manually to keep the device installed vertically.

Device Connection

Based on the actual situations, connect the device according to the following wiring steps.

Note

- Use the attached PoE injector and power adapter to power on the device.
- The PoE injector must be connected to an earthed socket outlet.
- The SSIDs of APs installed in the same direction cannot be the same to avoid matching failure.

1. **AP connection:**
   a. Switch the CPE/AP DIP to set the device as AP.
   b. Set SSID (Set SSID NO. 1 for example).
   c. Power on the AP device by the PoE injector.

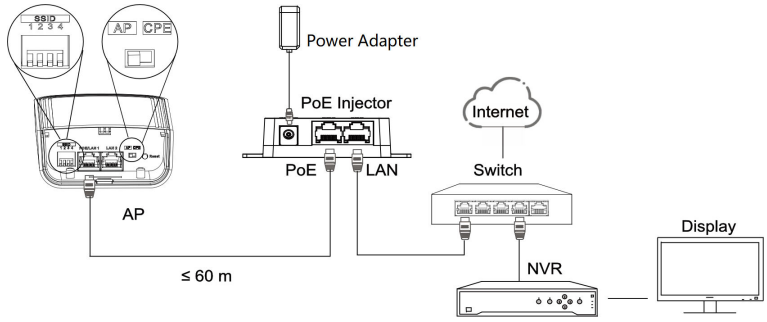

Figure 3-117 AP Connection

2. **CPE connection:**
   a. Switch the CPE/AP DIP to set the device as CPE.
   b. Select the SSID No. set on the AP to match (Select SSID NO. 1 for example).
   c. CPE device can supply power to IPC.
   d. Optional: If there are more than one CPE (no more than 4) to be matched with one AP, repeat the previous steps connect and set the CPEs.

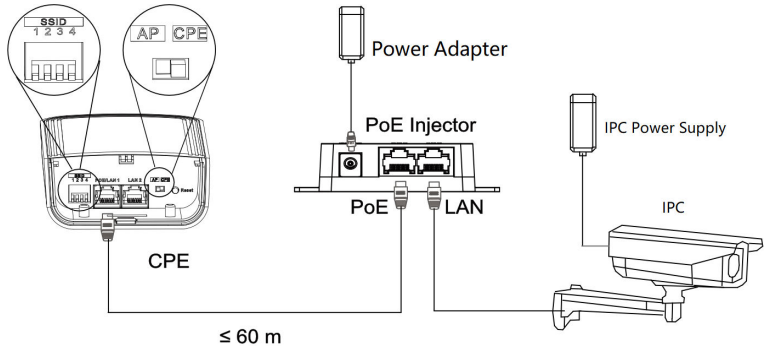

Figure 3-118 CPE Connection

3. After you finish the device connection, check device working status, network connection, and signal strength according to indicators.

Chapter 4 First-Time Use

4.1 Activation

For the security of your privacy and system data, you are required to set a password for your first use. After the password is set, you can log in to the web for further configuration.

Activate with Wireless Connection

Steps

1. Power on the wireless bridge by the accessories in the package.

   Note

   The accessories vary with different models. Please check Device Information on Quick Start Guide.

2. Check the label on the back of the wireless bridge, and get the last 4 numbers (e.g. XXXX) of the **SN** code.
3. Connect your phone or PC to the Wi-Fi network of the wireless bridge.
   - **Wi-Fi Name**: HIKVISION_XXXX
   - **Password**: 123456789abc

   Note

   Connecting to the admin SSID cannot make the terminal access to the Internet.

4. Open the web browser on your phone or PC, and go to **192.168.138.10**.
5. Set your password and confirm.

   Caution

   - The password strength of the device can be automatically checked. We highly recommend you change the password of your own choosing (using a minimum of 8 characters, including at least three kinds of following categories: uppercase letters, lowercase letters, numbers, and special characters) in order to increase the security of your product. And we recommend you change your password regularly, especially in the high security system. Changing the password monthly or weekly can better protect your product.
   - Proper configuration of all passwords and other security settings is the responsibility of the installer and/or end-user.

6. Select your **Country/Region**.
7. Click **Confirm**. The device activation is completed.

   Note

   The wireless connection is only available for some models. If the activation is failed, try to activate devices with wired connection.

Activate with Wired Connection

Step

1. Power on the wireless bridge by the accessories in the package.

Note

The accessories vary with different models. Please check Device Information on Quick Start Guide.

2. Connect the LAN port on your device to the network port on your PC via an Ethernet cable.
3. Set the IP address of your PC in the same network segment with the device.
   a. Go to **Settings → Network and Internet → Network Connection → Ethernet → General → Internet Protocol Version 4 (TCP/IPv4) Properties** on your PC.
   b. Check **Use Following IP Address**.
   c. Set the IP address of your PC in the same network segment with the device.

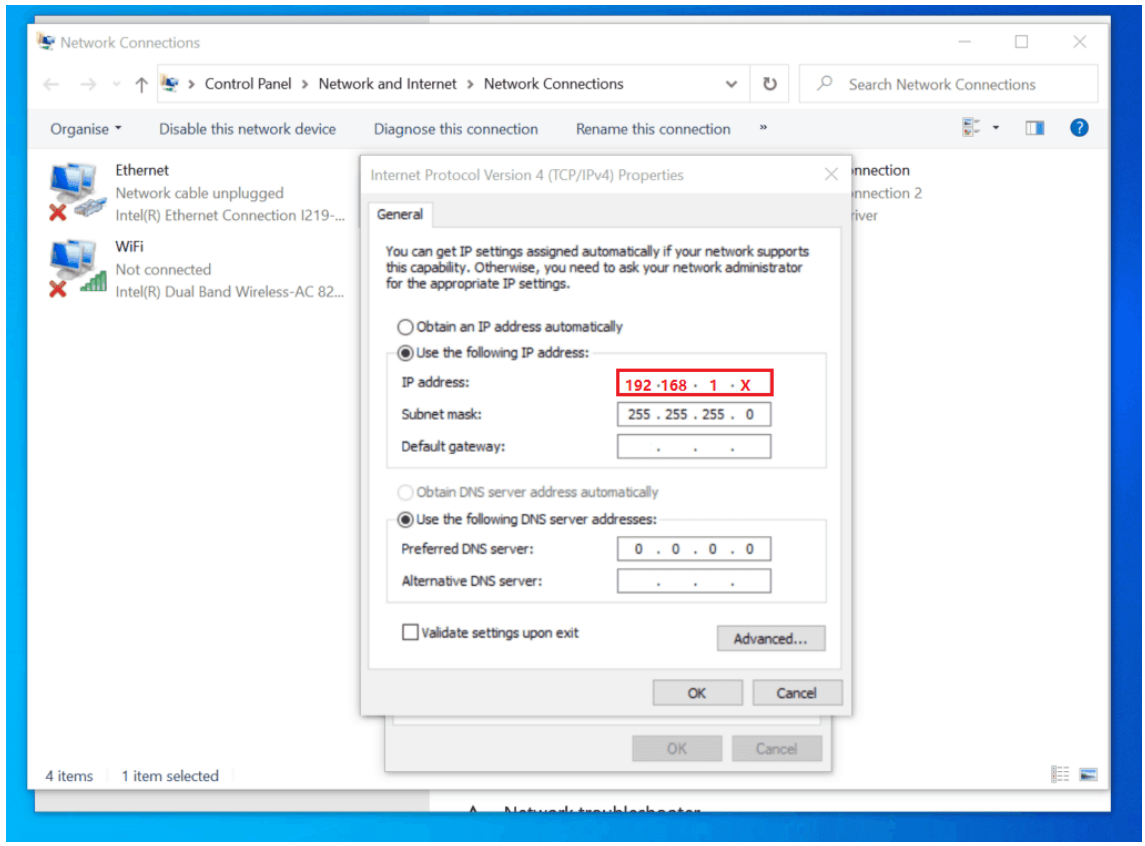

Figure 4-1 Set PC IP Address

4. Open the web browser and go to the IP address of the device in the address bar.
   - AP default IP address: 192.168.1.35
   - CPE default IP address: 192.168.1.36
   - Default user name: admin

Note

Check the label on the back of your device to confirm IP Address.

5. Set your password and confirm.

Caution

- The password strength of the device can be automatically checked. We highly recommend you change the password of your own choosing (using a minimum of 8 characters, including at least three kinds of following categories: uppercase letters, lowercase letters, numbers, and special characters) in order to increase the security of your product. And we recommend you change your password regularly, especially in the high security system. Changing the password monthly or weekly can better protect your product.
- Proper configuration of all passwords and other security settings is the responsibility of the installer and/or end-user.

6. Select your **Country/Region**.
7. Click **Confirm**. The device activation is completed.

Log in to the Device

Log in to the device to check device information and configure related parameters.

Steps

1. Enter the IP address in the address bar of the web browser, and press Enter.
   - AP default IP address: 192.168.1.35
   - CPE default IP address: 192.168.1.36
2. Enter the user name and password.
   - Default user name: admin
   - Password is the one you set in the activation.
3. Click **Login**.

4.2 Login

Log in to the device to check device information and configure related parameters.

Steps

1. Enter the IP address in the address bar of the web browser, and press Enter.
   - AP default IP address: 192.168.1.35
   - CPE default IP address: 192.168.1.36
2. Enter the user name and password.
   - Default user name: admin
   - Password is the one you set in the activation.
3. Click **Login**.

4.3 Device Pairing

Device Packing in Pairs

Devices packing in pairs will match with each other automatically after being activated.

Device with DIP Switch

Step

1. Set the **AP/CPE DIP Switch** on the devices. Make sure that one device is set as **AP**, other devices are set as **CPE**.
2. Set the **SSID** dips on the devices. Make sure that all devices in a group are set with the same SSID.

Other Device

Step

1. Log in the web of your devices.
2. Go to **Wireless Settings → Basic Settings** .
3. Set one device as **AP** working scene, and others as **CPE** working scene.
4. Set the **PSK Password** for all the devices to be the same.

Fail to Pair

If pairing devices failed, try to check the following items:

1. Check if the two devices are installed face-to-face within the declaired distance.
2. Press and hold **Reset** buttons on devices for more than 4s to restore devices. Then activate devices again.
3. If pairing devices still failed, please contact technical support personnel.

Chapter 5 Remote Management

After the device is activated, you can manage the device remotely using the web browser, iVMS-4200 client, SADP software, and HikCentral Professional clients. Click the corresponding link for more details.

Table 5-1 Link of Operation Tool

Operation Tool	Link
Web Browser	***Click here*** for the User Manul. **Note** ***Click here*** for the User Manual of *DS-3WF0BC-2NT(B)*.
iVMS-4200 Client	***Click here*** for the User Manul.
SADP Software	***Click here*** for the User Manul.
HikCentral Professional	• HikCentral Professional Web Client: ***Click here*** for the User Manul. • HikCentral Professional Control Client: ***Click here*** for the User Manul. • HikCentral Professional Mobile Client: ***Click here*** for the Function List.

Chapter 6 FAQ

6.1 Why Devices Pairing Failed?

Reason

The devices pairing status depends on the distance, direction, SSID name, and PSK password.

Solution

You can check as follows:

1. Check distance and direction: Ensure the AP and CPE are directly faced to each other, and the distance between them is within the limit.
2. Check SSID name and PSK password: Ensure the SSID name and PSK password are correct.

6.2 Why the Device Cannot Start Up?

Reason

1. The network cable length connecting the wireless bridge to the PoE module exceeds 60 m.
2. The network cable cannot meet the standard of Category 5e.
3. The registered jack of the network cable is not firmly connected, or the connection order is improper.

Solution

1. Use a network cable shorter than 60 m.
2. Use a network cable with Category 5e or higher standard.
3. Remake the registered jack.

6.3 Why the Signal Intensity Is Too Low?

Reason

1. There is a large-sized obstruction between the CPE and the AP.
2. The CPE is not directly faced to the AP.

Solution

1. Remove the obstruction or bypass it.
2. Adjust the angle of the CPE and the AP.

6.4 Why the Throughput Is Inadequate Even with High Signal Quality?

Reason

1. Excessive interference or multipath interference.
2. Wired device error.

Solution

1. Remove the interference or change the device frequency.

   Note

   Method of changing frequency: Reboot the AP of wireless bridge to allow auto search of available signal channels.

2. Change a network cable or use another PC.

6.5 Why the Wireless Connection Rate Is Relatively Low?

Reason

The wireless system makes connection with its maximum working rate, and the actual rate depends on the distance and environment.

Solution

You can check as follows to ensure the highest connection rate:

1. Device position: Adjust the device position and direction.
2. Wireless channel or frequency: Change to another signal channel or frequency to reduce interference.
3. Wireless interference: Adjust, shield, or disable the device causing interference.

6.6 Why There Are Excessive Packet Loss and Time Delay when PC Pings the Device IP Address?

Reason

1. The registered jack of the network cable is not firmly connected.
2. The IP addresses of multiple devices conflict.

Solution

Port isolation should be conducted for APs connected to the same switch.

1. Remake the registered jack.
2. Modify the IP addresses of different devices.

See Far, Go Further